LOWER PAXTON TOWNSHIP

PLANNING COMMISSION

June 4, 2020

Meeting Agenda

I. Call to Order

II. Pledge of Allegiance

III. Approval of Minutes

IV. New Business

a. Final Land Development Plan for Lot 3 Blue Ridge Village

V. Public Comment - Comments may be made through online submission form: https://www.lowerpaxton-pa.gov/FormCenter/Planning-Commission-8/Planning-Commission-Public-Comment-Submi-55

VI. Commissioners Comment

VII. Next Regular Meeting: **July 1, 2020**

VIII. Adjournment

FINAL LAND DEVELOPMENT PLAN
FOR
LOT 3, BLUE RIDGE VILLAGE
LOCATED IN
LOWER PAXTON TOWNSHIP, DAUPHIN COUNTY, PA

DRAWING INDEX

SHEET NO.	TITLE
1	COVER SHEET
2	EXISTING CONDITIONS PLAN
3	LAND DEVELOPMENT PLAN
4	GRADING & PCSM PLAN
5	LANDSCAPE PLAN
6	LANDSCAPE NOTES
7	LIGHTING PLAN
8	EROSION & SEDIMENT POLLUTION CONTROL PLAN
9	SANITARY SEWER & STORM SEWER PROFILES
10	STORM SEWER PROFILES
11	MISCELLANEOUS DETAILS
12	PCSM, SANITARY SEWER & UTILITY DETAILS
13	SANITARY SEWER DETAILS
14	SANITARY SEWER DETAILS
15	EROSION & SEDIMENT POLLUTION CONTROL DETAILS
16	EROSION & SEDIMENT POLLUTION CONTROL DETAILS
17	EROSION & SEDIMENT POLLUTION CONTROL DETAILS

GENERAL NOTES

1. The pre-existing use of the development site was a golf course and clubhouse/restaurant.
2. The proposed use of Lot 3 is a retail building.
3. The following reports are part of this plan submission, and are in the Township file for this project:
   - Wetland Delineation Report, by Vortex Environmental, dated 05/09/18.
   - Traffic Impact Study by Traffic Planning & Design Inc. for Blue Ridge Village, was previously submitted to the Township and Penndot.
   - Stormwater Management Narrative, prepared by R.J. Fisher & Assoc., Inc, last revised 11/13/18.
   - These document contains proposed covenants and restrictions for this project, which are too numerous to repeat here.
4. Previously proposed and now existing streets shown hereon are local/minor roads with a posted speed limit of 25 MPH.
5. All utilities have been contacted, and all easements and rights-of-way are shown.
6. The applicant shall comply with all applicable Township ordinances in effect at the time of submission of the Preliminary Plan.
7. All public improvements will comply with the Township's construction specifications.
8. Within clear sight triangles shown hereon, no permanent walls, fences, signs, structures, obstructions, grading and/or plant materials over 30 inches high shall be placed or maintained, so that vision of motorists is not obscured.
9. No new stormwater management facilities are being proposed as part of this plan. This lot will utilize the stormwater facilities constructed as part of the land development plan for Blue Ridge Village, Phase 1.
10. Drainage facilities located outside of accepted public street rights-of-way shall be owned and maintained by the developer, until turned over to a homeowners association(s). The developer or association(s) shall maintain the drainage facilities to the design, dimensions and elevations indicated on these drawings, and such facilities shall be permanent unless and until a revised stormwater management plan is approved by the applicable Township. Required maintenance tasks shall include removal of debris and sediment, and repair of any erosion.
11. The vertical datum is based on the U.S.G.S. North American Vertical Datum of 1988 (NAVD 88). The vertical control is based on PennDOT benchmark KJC36. The following additional field survey work has been completed by R.J. Fisher & Associates: aerial mapping on February 2, 2020; field survey on March 17, 2020. Primary Control Point /Benchmark is as labeled/shown on plan.
12. A Flood Plain is near but not on this lot. Floodplain shown is from Flood Insurance Rate Map for Lower Paxton Township, Panel 9 of 11, Community Panel #42043 CO33OD, effective date 8/2/2012.
13. All other lot corners not already marked shall be marked with iron rebar or as noted on the plan.
14. The PCSM plan, inspection reports and monitoring records shall be available for review and inspection by the PADEP or conservation district.
15. As-built Plans shall be provided in accordance with Subdivision and Land Development Ordinance 180-808.
16. All ADA ramp locations and details shall meet the current ADA requirements and PENNDOT RC details.
17. Maximum impervious coverage for the overall tract development after completion is 60%.
18. Areas located within conservation easements shall be protected from any further development or destruction
19. All materials, workmanship and methods of work shall comply with the current editions, as supplemented, of PennDOT Publication 408 and PennDOT Publication 72M.
20. An NPDES Permit has been issued for the entire Bue Ridge Village development including this lot by the Dauphin County Conservation District. An Erosion & Sediment Control Plan is prepared for this lot and will be submitted to DCCD to confirm compliance with the NPDES permit.
21. Nothing shall be planted or placed within the easement which would adversely affect the function of the easement, or conflict with any conditions associated with such easement.
22. A sign permit shall be required for all signage. Prior to the erection of any signs, a sign plan shall be submitted to the Township for review and approval.
23. All inlets will be sized to accept the specified pipe sizes without corner penetrations. All pipes entering or exiting inlets shall be cut flush with the inlet wall.
24. Operation and Maintenance (O&M) will be submitted as part of the SWM site plan.
25. Any financial security related to the Final plans and associated with any curb ramps which cannot be installed to satisfy all current ADA/PennDOT specifications shall not be released until a completed Technical infeasibility Form (TIF) using the current PennDOT TIF format is provided by the applicant and approved by the Township.
26. Within the public right-of-way, the project Geotechnical Engineer and Township Engineer shall be required to be on-site for all proof-rolling procedures, structural fill placement, foundation subgrade review, pavement placement and all critical earthwork operations.
27. The Township or their designee shall have access to all easements via the nearest public right-of-way.
28. A certificate of occupancy shall be required for all buildings.
29. Sanitary easement beneficiary will be Lower Paxton Township Authority.
30. Storm easement beneficiary will be Lower Paxton Township Authority.
31. Conservation easement beneficiary will be Lower Paxton Township.
32. Sidewalk easement beneficiary will be Lower Paxton Township.
33. EG Drive access easement beneficiary will be Commercial Lots 2,3,4,7 and 8.
34. Contractor will need to provide Shop Drawings for Grease Interceptors and Sampling Manholes prior to ordering and installation.
35. Sanitary sewer construction will require a permit prior to sanitary sewer installation. All sanitary sewer installation must be inspected prior to backfilling; pipe installation will require an air test.
36. Sanitary sewer inspections must be scheduled a minimum of 24 hours in advance by calling 717-657-5617.
37. Street Trees, if applicable, shall be in accordance with approved Phase 1 Land Development for Blue Ridge Village.
38. The applicant will be responsible for paying for the installation of all street and traffic control signs required for the project as deemed necessary by Lower Paxton Township.
39. Prior to the erection of any signs, a sign plan shall be submitted to the Township for review and approval A sign permit shall be required for all signage.

AGENCY APPROVALS / PERMITS

APPROVAL	NUMBER	APPROVAL DATE	EXPIRATION DATE
PA DEP SEWAGE APPROVAL- WQM PERMIT	WQG02221902	6/13/2019	6/12/2021
SUEZ WATER ABILITY TO SERVE		8/15/2018	8/15/2019
LOWER PAXTON TOWNSHIP BLUE RIDGE VILLAGE, PHASE 1 FINAL SUBDIVISION & LAND DEVELOPMENT PLAN APPROVAL	RECORDER I# 20190011907	9/18/2018	
LOWER PAXTON TOWNSHIP LOT 3 FINAL LAND DEVELOPMENT PLAN APPROVAL			
DAUPHIN COUNTY CONSERVATION DISTRICT EROSION & SEDIMENT CONTROL PLAN ADEQUACY DETERMINATION	see NPDES	2/21/2019	2/20/2024
PADEP NOTICE OF INTENT NPDES GENERAL PERMIT (PHASE 1)	PAC220134	2/21/2019	2/20/2024

AERIAL PLAN
SCALE: 1" = 100'
(AERIAL PHOTOGRAPH CAPTURED 12/04/19)

GRAPHIC SCALE
0 50 100 200
(IN FEET)
1 inch = 100 ft.

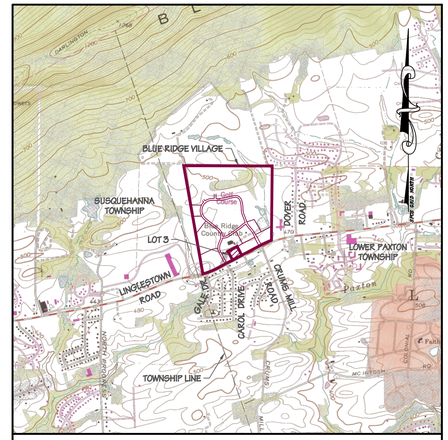

LOCATION MAP: 1" = 2000'

PENNSYLVANIA ACT 287 OF 1974, AS AMENDED BY ACT 50 OF 2017, REQUIRES NOTIFICATION OF EXCAVATORS, DESIGNERS, OR ANY PERSON PREPARING TO DISTURB THE EARTH'S SURFACE ANYWHERE IN THE COMMONWEALTH.
SERIAL NO. 20202063090
COMPLETED ON MARCH 3, 2020

LIST OF UTILITIES

SUEZ WATER PENNSYLVANIA INC
8189 ADAMS DRIVE
HUMMELSTOWN, PA. 17036
CONTACT: LOUISE DOLAN
EMAIL: LOUISE.DOLAN@SUEZ.COM

VERIZON PENNSYLVANIA LLC
1026 HAY STREET
PITTSBURGH, PA. 15221
CONTACT: DEBORAH BARUM
EMAIL: DEBORAH.D.DELIA@VERIZON.COM

LOWER PAXTON TOWNSHIP AUTHORITY
5993 LOCUST LANE
HARRISBURG, PA. 17109
CONTACT: JAMES WETZEL
EMAIL: JWETZEL@LOWERPAXTON-PA.GOV

PPL ELECTRIC UTILITIES CORPORATION
503 NEW MARKET STREET
WILKES BARRE, PA. 18702
CONTACT: MARK SANTAYANA
EMAIL: MCSANTAYANA@PPLWEB.COM

COMCAST
4601 SMITH STREET
HARRISBURG, PA. 17109
CONTACT: MICHAEL SWEIGARD
EMAIL: MIKE_SWEIGARD@CABLE.COMCAST.COM

UGI UTILITIES
1301 AIP DRIVE
MIDDLETOWN, PA. 17057
CONTACT: STEPHEN BATEMAN
EMAIL: SBATEMAN@UGI.COM

ZONING DATA

1. SITE IS ZONED RESIDENTIAL RETIREMENT DISTRICT (RRD)
2. ASSUMED IMPERVIOUS COVERAGE OF LOT 3 USED TO CALCULATE OVERALL DEVELOPMENT COVERAGE: 57%
3. PROPOSED IMPERVIOUS COVERAGE OF LOT 3: 57%
4. MAXIMUM ALLOWED BUILDING HEIGHT: 40 FEET (60 FEET WITH EXCEPTIONS)
   THE MINIMUM YARD SETBACK TO THE LOT LINE SHALL BE INCREASED BY 2 FEET FOR EACH FOOT THAT THE HEIGHT OF THE BUILDING EXCEEDS 40 FEET, EXCEPT ALONG LOT LINES ABUTTING A LOT IN COMMON OWNERSHIP, A STREET RIGHT OF WAY, OR A LOT USED AS A SINGLE FAMILY DETACHED OR TOWNHOME DWELLING UNIT.
5. REQUIRED OFF-STREET PARKING: 39 SPACES
   (1 SPACE PER 200 S.F. OF FLOOR AREA X 7,700 S.F.)
6. PROPOSED OFF-STREET PARKING: 65 SPACES
7. FRONT SETBACK: 15 FEET SIDE SETBACK: 10 FEET REAR SETBACK: 25 FEET

SITE DATA

1. RECORD OWNER:
   BRCC LP
   5351 JAYCEE AVE.
   HARRISBURG, PA 17112
2. TAX PARCEL NUMBER: 35-009-209
3. LOT 3 AREA: 79872 S.F., 1,834 ACRES
4. PRE-EXISTING USE: PART OF A GOLF COURSE
5. PROPOSED LOT 3 USE: RETAIL
6. EXISTING WATER SUPPLY: PUBLIC
7. PROPOSED WATER SUPPLY: PUBLIC
8. EXISTING SANITARY SEWER DISPOSAL: PUBLIC
9. PROPOSED SANITARY SEWER DISPOSAL: PUBLIC
10. LINEAR FEET OF NEW PUBLIC STREETS: 0 LINEAR FEET
11. LINEAR FEET OF NEW STORM SEWER: 0 LINEAR FEET
12. LINEAR FEET OF NEW SANITARY SEWER: 0 LINEAR FEET

ACKNOWLEDGMENT OF PLAN, STATEMENT OF OWNERSHIP AND OFFER OF DEDICATION

COMMONWEALTH OF PENNSYLVANIA
COUNTY OF _____

ON THIS THE _____ DAY OF _____, 20_____ BEFORE ME THE UNDERSIGNED PERSONALLY APPEARED.

OWNER: MARK X. DiSANTO _____
SIGNATURE

WHO BEING DULY SWORN ACCORDING TO LAW, DISPOSE AND SAY THAT THEY ARE THE OWNER(S) OR EQUITABLE OWNER(S) OF THE PROPERTY SHOWN ON THIS PLAN AND THAT THEY ACKNOWLEDGE THE SAME TO BE THEIR ACT AND DEED, THAT ALL STREETS OR PARTS THEREOF AND OTHER LAND INTENDED TO BE OFFERED FOR PUBLIC USE, IF NOT PREVIOUSLY DEDICATED, ARE HEREBY OFFERED FOR DEDICATION TO PUBLIC USE AND DESIRE THE SAME TO BE RECORDED AS SUCH ACCORDING TO LAW.

WIDNESS MY HAND AND NOTORIAL SEAL THE DAY AND THE DATE ABOVE WRITTEN

_____
NOTARY PUBLIC MY COMMISSION EXPIRES

PLAN APPROVAL BLOCKS

THIS PLAN REVIEWED BY THE DAUPHIN COUNTY PLANNING COMMISSION
THIS _____ DAY OF _____ 20_____

CHAIRMAN _____

SECRETARY _____

THIS PLAN REVIEWED BY THE LOWER PAXTON TOWNSHIP ENGINEER
THIS _____ DAY OF _____ 20_____

TOWNSHIP ENGINEER _____

THIS PLAN RECOMMENDED FOR APPROVAL BY THE LOWER PAXTON TOWNSHIP PLANNING COMMISSION THIS _____ DAY OF _____ 20_____

CHAIRMAN _____

SECRETARY _____

THIS PLAN APPROVED BY THE LOWER PAXTON TOWNSHIP BOARD OF SUPERVISORS. AND ALL CONDITIONS IMPOSED WITH RESPECT TO SUCH APPROVAL WERE COMPLETED ON THIS _____ DAY OF _____ 20_____

CHAIRMAN _____

SECRETARY _____

UPI CERTIFICATION:

RECORDER OF DEEDS CERTIFICATION:

WAIVERS

THE FOLLOWING WAIVERS ARE REQUESTED OR WERE APPROVED FROM THE LOWER PAXTON TOWNSHIP SALDO & STORMWATER CODE

WAIVER SECTION	REQUIREMENT	DATE OF WAIVER REQUEST	DATE OF WAIVER APPROVAL
170-701.G.	RESTRICTING PLANTS, UTILITIES, RETAINING WALL, AND SITE LIGHTING WITHIN DRAINAGE EASEMENT	05/13/20	/ /
180-503.K	NO OBSTRUCTIONS ARE ALLOWED WITHIN THE CLEAR SIGHT TRIANGLE (CST)	05/13/20	/ /
180-515.D.1	PROVIDE SITE LANDSCAPING AMENITIES AROUND THE RETAIL BUILDING FOUNDATION AND BUILDING ENTRANCE POINT	05/13/20	/ /

MODIFICATIONS

THE FOLLOWING MODIFICATIONS ARE REQUESTED OR WERE APPROVED FROM THE LOWER PAXTON TOWNSHIP SALDO CODE:

WAIVER SECTION	REQUIREMENT	DATE OF WAIVER REQUEST	DATE OF WAIVER APPROVAL
180.515.B 4. & 5.	TO INSTALL SCREENING IN REQUIRED BUFFER YARDS PER DESIGN STANDARDS - ALTERNATIVE PROPOSED PER PLAN	05/13/20	/ /

OWNER / APPLICANT

BRCC LP
5351 JAYCEE AVENUE
HARRISBURG PA, 17112
PHONE: 717-657-5729
WEBSITE: TRIPLECROWNCORP.COM

I HEREBY ACKNOWLEDGE THAT STORMWATER MANAGEMENT FACILITIES AND BMPs ARE TO BE PERMANENT FIXTURES THAT CAN BE ALTERED OR REMOVED ONLY AFTER APPROVAL OF A REVISED PLAN BY THE MUNICIPALITY.

_____
MARK DISANTO, CEO

I HEREBY CERTIFY THAT, TO THE BEST OF MY KNOWLEDGE, THE SURVEY AND PLAN SHOWN AND DESCRIBED HEREON IS TRUE AND CORRECT TO THE ACCURACY REQUIRED BY THE LOWER PAXTON TOWNSHIP SUBDIVISION AND LAND DEVELOPMENT ORDINANCE.

I HEREBY CERTIFY THIS PLAN TO BE CORRECT AS SHOWN AND IN COMPLIANCE WITH THE REQUIREMENTS OF THE LOWER PAXTON TOWNSHIP SUBDIVISION AND LAND DEVELOPMENT ORDINANCE.

I HEREBY CERTIFY THAT THE STORMWATER MANAGEMENT PLAN MEETS ALL DESIGN STANDARDS AND CRITERIA OF THE LOWER PAXTON TOWNSHIP'S STORMWATER MANAGEMENT ORDINANCE.

_____
ROBERT J. FISHER, P.L.S., P.E. DATE

DESIGN ENGINEER

R.J. FISHER & ASSOCIATES, INC.
1546 BRIDGE STREET
NEW CUMBERLAND, PA 17070
PHONE: (717) 774-7534
E-MAIL: RJF@RJFISHERENGINEERING.COM

R. J. FISHER & ASSOCIATES, INC.
▫ SITE PLANNING ▫ CIVIL ENGINEERING ▫ LAND SURVEYS
1546 BRIDGE STREET, NEW CUMBERLAND, PA. 17070
PHONE: (717) 774-7534 FAX: (717) 774-7190
WWW.RJFISHERENGINEERING.COM

No.	REVISION	DATE
1	TWP/CTY COMMENTS	05/13/20
2	----	----
3	----	----
4	----	----

DRAWING ID: 220014-COV
DATE: 04/08/20

COPYRIGHT @ 2020 BY
R.J. FISHER & ASSOCIATES, INC.

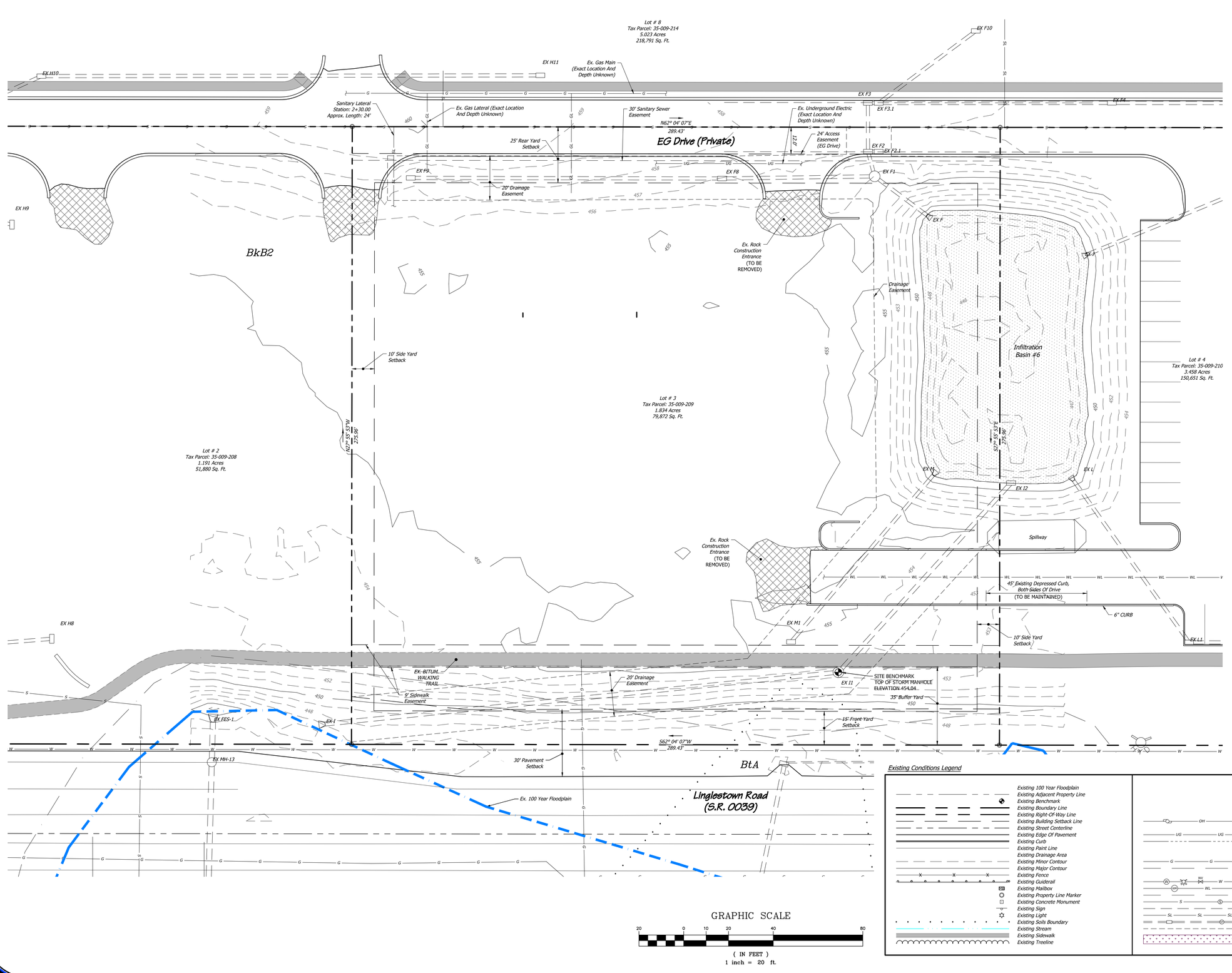

GRAPHIC SCALE

20 0 10 20 40 80

(IN FEET)
1 inch = 20 ft.

Existing Conditions Legend

- Existing 100 Year Floodplain
- Existing Adjacent Property Line
- Existing Benchmark
- Existing Boundary Line
- Existing Right-Of-Way Line
- Existing Building Setback Line
- Existing Street Centerline
- Existing Edge Of Pavement
- Existing Curb
- Existing Paint Line
- Existing Drainage Area
- Existing Minor Contour
- Existing Major Contour
- Existing Fence
- Existing Guiderail
- Existing Mailbox
- Existing Property Line Marker
- Existing Concrete Monument
- Existing Sign
- Existing Light
- Existing Soils Boundary
- Existing Stream
- Existing Sidewalk
- Existing Treeline
- Existing Deciduous Tree
- Existing Coniferous Tree
- Existing Overhead Utility Wire, Utility Pole, Guy Pole, Guy Wire
- Existing Underground Utilities
- Existing Utility Easement
- Existing Communications Box
- Existing Underground Electric Transformer
- Existing Gas Main, Valve
- Existing Gas Easement
- Existing Gas Lateral, Service Shut-Off
- Existing Water Main, MH, Hydrant, Valve
- Existing Water Lateral, Meter, Service Shut-Off
- Existing Water Easement
- Existing Sanitary Sewer Line, MH
- Existing Sanitary Sewer Easement
- Existing Sanitary Lateral
- Existing Storm Sewer Line, Inlet, MH
- Existing Storm Sewer Easement
- Existing Wetlands

NO	REVISION	DATE
1	TWP./CTY COMMENTS	05/13/20
2	----	----
3	----	----
4	----	----

COPYRIGHT @ 2020 BY
R.J. FISHER & ASSOCIATES, INC.

R. J. FISHER & ASSOCIATES, INC.
SITE PLANNING ▫ CIVIL ENGINEERING ▫ LAND SURVEYS
1546 BRIDGE STREET, NEW CUMBERLAND, PA. 17070
PHONE: (717) 774-7534 FAX: (717) 774-7190
WWW.RJFISHERENGINEERING.COM

EXISTING CONDITIONS PLAN
FOR
LOT 3, BLUE RIDGE VILLAGE
LOCATED IN
LOWER PAXTON TOWNSHIP, DAUPHIN COUNTY, PA

DRAWING ID: 220014-EXC
DATE: 04/08/20
SHEET: 2 OF 17

R. J. Fisher & Associates, Inc.

J:\PROJECTS\2020\220014\CAD\LDP-SUB\220014-EXC.DWG
Plotted: 04/08/2020 - 10:45AM By: KEN
XREF: 220014-EXC

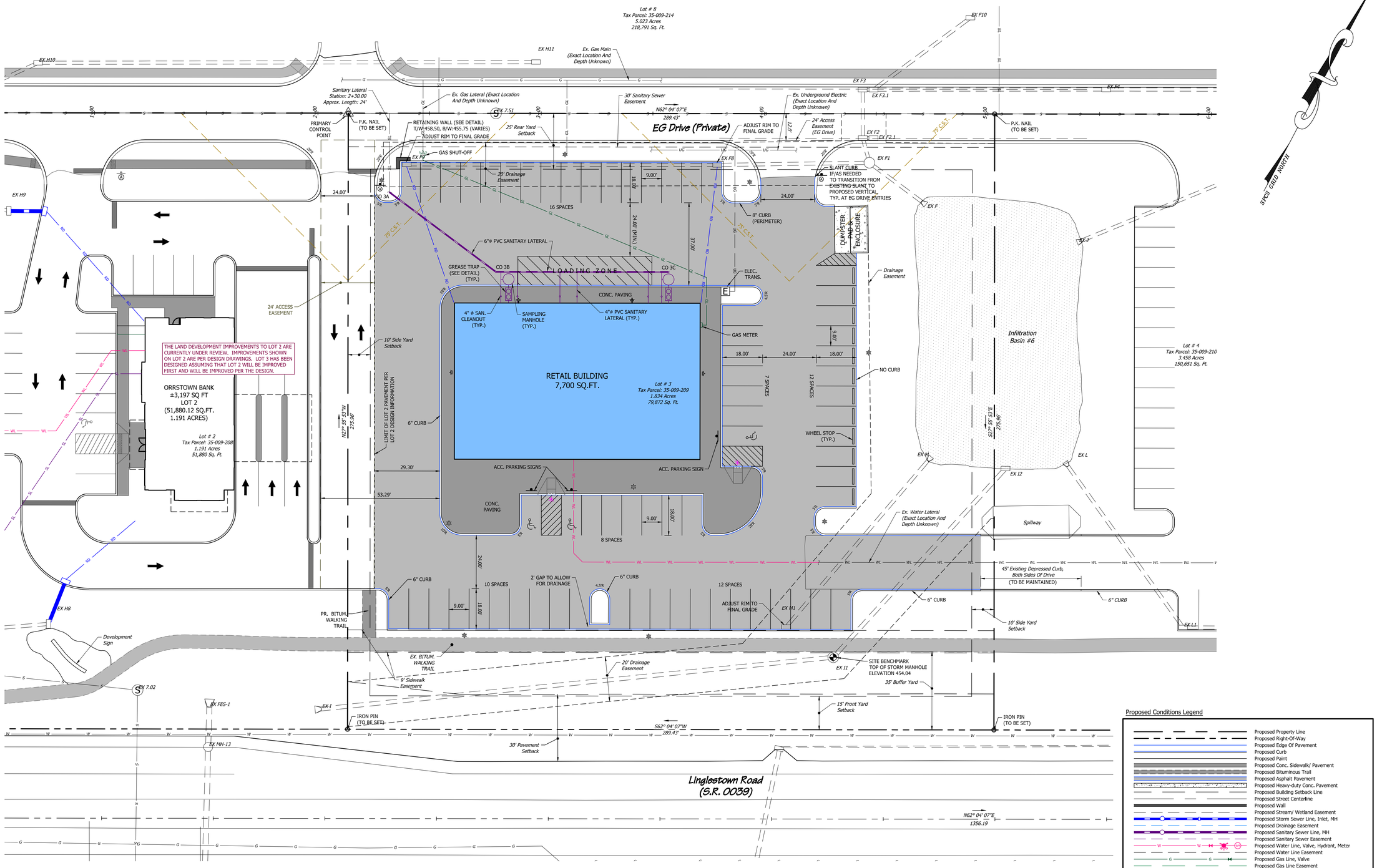

TRAFFIC SIGN CHART

PLAN SYMBOL	PENNDOT DESIGNATION	SIGN DESCRIPTION	SIZE
⊕	R1-1	STOP	30" X 30"

NOTE: SIGN MATERIALS, COLORS, LETTERING, HEIGHT, CLEARANCE, POST AND MOUNTING SHALL CONFORM TO PENNDOT PUBLICATION TITLE 67, CHAPTER 212:"OFFICIAL TRAFFIC-CONTROL DEVICES".

GRAPHIC SCALE

20 0 10 20 40 80

(IN FEET)
1 inch = 20 ft.

Proposed Conditions Legend

- Proposed Property Line
- Proposed Right-Of-Way
- Proposed Edge Of Pavement
- Proposed Curb
- Proposed Paint
- Proposed Conc. Sidewalk/ Pavement
- Proposed Bituminous Trail
- Proposed Asphalt Pavement
- Proposed Heavy-duty Conc. Pavement
- Proposed Building Setback Line
- Proposed Street Centerline
- Proposed Wall
- Proposed Stream/ Wetland Easement
- Proposed Storm Sewer Line, Inlet, MH
- Proposed Drainage Easement
- Proposed Sanitary Sewer Line, MH
- Proposed Sanitary Sewer Easement
- Proposed Water Line, Valve, Hydrant, Meter
- Proposed Water Line Easement
- Proposed Gas Line, Valve
- Proposed Gas Line Easement
- Proposed Overhead Utility
- Proposed Underground Utility
- Proposed Utility Easement
- Proposed Treeline
- Proposed Property Monument (To Be Set)
- Proposed Concrete Monument (To Be Set)
- Proposed Sign
- Proposed Light
- Proposed Pedestrian Ramp Location (See Detail)

NO	REVISION	DATE
1	TWP./CTY COMMENTS	05/13/20
2	----	----
3	----	----
4	----	----

COPYRIGHT @ 2020 BY
R.J. FISHER & ASSOCIATES, INC.

R. J. FISHER & ASSOCIATES, INC.
SITE PLANNING ▫ CIVIL ENGINEERING ▫ LAND SURVEYS
1546 BRIDGE STREET, NEW CUMBERLAND, PA. 17070
PHONE: (717) 774-7534 FAX: (717) 774-7190
WWW.RJFISHERENGINEERING.COM

LAND DEVELOPMENT PLAN
FOR
LOT 3, BLUE RIDGE VILLAGE
LOCATED IN
LOWER PAXTON TOWNSHIP, DAUPHIN COUNTY, PA

DRAWING ID: 220014-LDP
DATE: 04/08/20
SHEET: 3 OF 17

DWG: K:\FY20\220014\CAD\LDP\DWG\220014-LDP.DWG
Plotted: 04/08/2020 10:45:41 AM By: KEM
LDP1 ▪

THE LAND DEVELOPMENT IMPROVEMENTS TO LOT 2 ARE CURRENTLY UNDER REVIEW. IMPROVEMENTS SHOWN ON LOT 2 ARE PER DESIGN DRAWINGS. LOT 3 HAS BEEN DESIGNED ASSUMING THAT LOT 2 WILL BE IMPROVED FIRST AND WILL BE IMPROVED PER THE DESIGN.

ORRSTOWN BANK
±3,197 SQ FT
LOT 2
(51,880.12 SQ.FT.
1.191 ACRES)
FFE - 455.85

RETAIL BUILDING
7,700 SQ.FT.
FFE = 457.68

EG Drive (Private)

LOADING ZONE

24' ACCESS EASEMENT

LIMIT OF LOT 2 PAVEMENT PER LOT 2 DESIGN INFORMATION

RETAINING WALL (SEE DETAIL)
T/W:458.50, B/W:455.75 (VARIES)
ADJUST RIM TO FINAL GRADE

20' Drainage Easement

Sanitary Lateral
Station: 2+30.00
Approx. Length: 24'

Ex. Gas Lateral (Exact Location And Depth Unknown)

Ex. Gas Main (Exact Location And Depth Unknown)

30' Sanitary Sewer Easement

Ex. Underground Electric (Exact Location And Depth Unknown)

24' Access Easement (EG Drive)

ADJUST RIM TO FINAL GRADE

SLANT CURB IF/AS NEEDED TO TRANSITION FROM EXISTING SLANT TO PROPOSED VERTICAL, TYP. AT EG DRIVE ENTRIES

8" CURB (PERIMETER)

DUMPSTER PAD W/ ENCLOSURE

6"ø PVC SANITARY LATERAL

GREASE TRAP (SEE DETAIL) (TYP.)

CO 3A
CO 3B
CO 3C

ELEC. TRANS.

4" ø SAN. CLEANOUT (TYP.)

SAMPLING MANHOLE (TYP.)

4"ø PVC SANITARY LATERAL (TYP.)

HIGH POINT

6" CURB

WHEEL STOP (TYP.)

NO CURB

Drainage Easement

Infiltration Basin #6

Spillway

2' GAP TO ALLOW FOR DRAINAGE

ADJUST RIM TO FINAL GRADE

EX M1

SITE BENCHMARK
TOP OF STORM MANHOLE
ELEVATION 454.04

EX 11

EX-BITUM. WALKING TRAIL

9' Sidewalk Easement

20' Drainage Easement

EX 7.02

EX FES-1

EX-1

EX MH-13

Ex. 100 Year Floodplain

Linglestown Road
(S.R. 0039)

N62° 09' 07"E
1356.19

EX H10
EX H11
EX H9
EX H8
EX F10
EX F3
EX F3.1
EX F4
EX F2
EX F2.1
EX F8
EX F1
EX F
EX J
EX K
EX L
EX 12
EX L1
EX 7.51

STATE GRID NORTH

Proposed Conditions Legend

- Proposed Property Line
- Proposed Right-Of-Way
- Proposed Edge Of Pavement
- Proposed Curb
- Proposed Sidewalk
- Proposed Retaining Wall
- Proposed Sanitary Sewer Line, MH
- Proposed Storm Sewer Line, Inlet, MH
- Proposed Roof Drain
- Proposed Water Line, Valve, Hydrant, Meter
- Proposed Gas Line
- Proposed Overhead Utility
- Proposed Underground Utility
- Proposed Minor Contour
- Proposed Major Contour
- Proposed Sign
- Proposed Light
- Proposed Pedestrian Ramp Location (See Detail)
- Proposed Rip-Rap Apron (See Detail)
- 500.00 Proposed Spot Elevation

GRAPHIC SCALE

20 0 10 20 40 80

(IN FEET)
1 inch = 20 ft.

NO	REVISION	DATE
1	TWP./CTY COMMENTS	05/13/20
2	----	----
3	----	----
4	----	----

COPYRIGHT @ 2020 BY
R.J. FISHER & ASSOCIATES, INC.

R. J. FISHER & ASSOCIATES, INC.
SITE PLANNING ▫ CIVIL ENGINEERING ▫ LAND SURVEYS
1546 BRIDGE STREET, NEW CUMBERLAND, PA. 17070
PHONE: (717) 774-7534 FAX: (717) 774-7190
WWW.RJFISHERENGINEERING.COM

GRADING & PCSM PLAN
FOR
LOT 3, BLUE RIDGE VILLAGE
LOCATED IN
LOWER PAXTON TOWNSHIP, DAUPHIN COUNTY, PA

DRAWING ID: 220014-GRD

DATE: 04/08/20

SHEET: 4 OF 17

Plotted: 5/13/2020 2:38:27 PM
By: JAMES
4-GRD

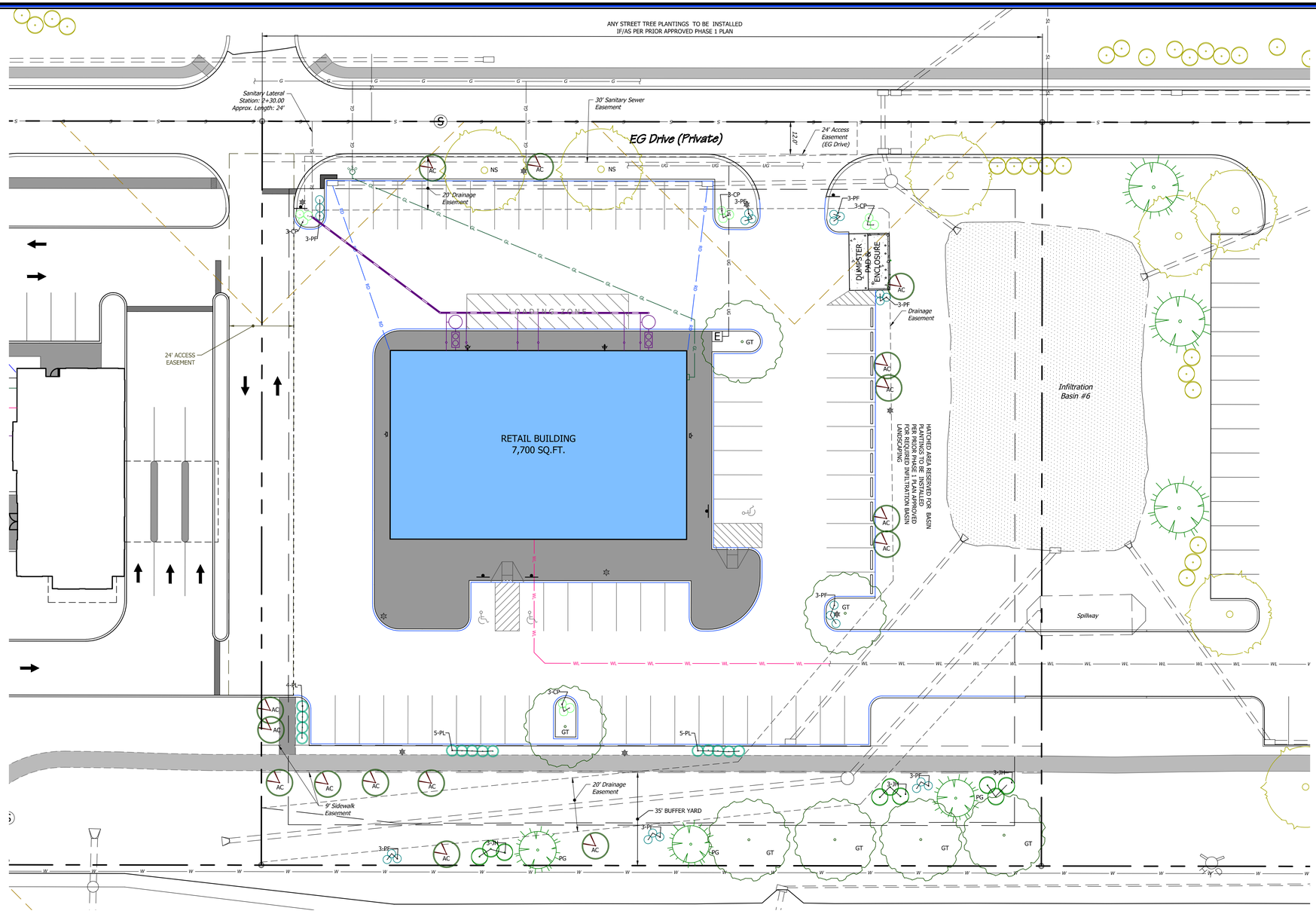

LANDSCAPE REQUIREMENTS, PROVISIONS, & SCHEDULE

LOT 3

SECTION 203-804.D - PARKING LOT LANDSCAPING
MINIMUM 1 DECIDUOUS TREE FOR EVERY 15 NEW OFF-STREET PARKING SPACES

LOT 3 PARKING LOT: TOTAL PARKING SPACES = 65 DECIDUOUS TREES REQUIRED = 5 DECIDUOUS TREES PROVIDED = 5

SYMBOL	ID	QUANTITY	BOTANICAL NAME	COMMON NAME	PLANTING SIZE/CONDITIONS	MATURE SIZE/GENERAL TYPE
	GT	3	GLEDITSIA TRIACANTHOS VAR. INERMIS "IMPCOLE"	IMPERIAL THORNLESS HONEYLOCUST	2" CALIPER, BALLED & BURLAPPED (B&B) ROOT	30' W. X 60' H. DECIDUOUS TREE
	NS	2	NYSSA SYLVATICA	BLACKGUM TUPELO	2" CALIPER, BALLED & BURLAPPED (B&B) ROOT	30'W X 50' DECIDUOUS TREE

SECTION SLDO 180-515.C. - PARKING INTERIOR & PERIMETER LANDSCAPING
•5% OF THE TOTAL PARKING LOT AREA SHALL BE DEVOTED TO INTERIOR LANDSCAPING
• EACH LANDSCAPING ISLAND MUST BE PROVIDED WITH A MINIMUM OF ONE DECIDUOUS TREE PLUS ONE SHRUB FOR EACH 100 SF OF ISLAND AREA.
• PARKING LOT PERIMETER LANDSCAPING SHALL BE PROVIDED AND SHALL BE A MINIMUM OF 5 FEET IN WIDTH.
A MINIMUM OF ONE DECIDUOUS OR CONIFEROUS TREE AND TWO SHRUBS SHALL BE PROVIDED FOR EACH 50 FEET OF PARKING LOT PERIMETER PROVIDED.

29000 S.F. OF PARKING LOT REQUIRES 1450 S.F OF INTERIOR LANDSCAPE AREA 1530 SF OF INTERIOR SPACE PROVIDED
3 TREES REQUIRED FOR 3 ISLANDS 3 ISLAND TREES PROVIDED
15 TOTAL SHRUBS REQUIRED FOR 1450 SF OF INTERIOR ISLAND AREA 15 TOTAL SHRUBS PROVIDED
650 LF OF PARKING PERIMETER REQUIRES 13 DECID./CONIFER TREES AND 26 SHRUBS 13 TREES & 26 SHRUBS PROVIDED

SYMBOL	ID	QUANTITY	BOTANICAL NAME	COMMON NAME	PLANTING SIZE/CONDITIONS	MATURE SIZE/GENERAL TYPE
	AC	13	AMELANCHIER CANADENSIS 'GLENFORM"	RAINBOW PILLAR SERVICEBERRY	#2 CONT.	10'W. X 20' H. DECID. TREE
	CP	12	CEANOTHUS PALLIDUS 'MINMARI'	MARIE BLEU NEW JERSEY TEA	#2 CONT.	3'W. X 2' H. DECIDUOUS SHRUB
	PF	15	POTENTILLA FRUITICOSA 'GOLD DROP'	GOLD DROP CINQUEFOIL	#2 CONT.	3' W. X 2'H. DECID. SHRUB
	PL	14	PRUNUS LAUROCERASUS 'SCHIPKAENSIS'	SCHIPKA CHERRY LAUREL	2' H. , #5 CONTAINER (2" CAL.)	5' W. X 8' H. EVERGREEN SHRUB

SECTION 180.515.B 4. & 5. - MODIFIED DESIGN STANDARDS FOR SCREENING IN REQUIRED BUFFER YARDS
* One tree PER 1500 square feet of req'd. landscape buffer area. Mixed evergreen and deciduous species , max. 70% deciduous ($\frac{12880}{1500}$= 9 TREES REQ'D.)
* one shrub for each 750 square feet of buffer area. Min. two feet at maturity ($\frac{12880}{750}$ = 18 SHRUBS REQUIRED)

SYMBOL	ID	QUANTITY	BOTANICAL NAME	COMMON NAME	PLANTING SIZE/CONDITIONS	MATURE SIZE/GENERAL TYPE
	PG	3	PICEA GLAUCA	WHITE SPRUCE	6-8 FEET, B& B	15'W. X 50' H. EVERGREEN TREE
	GT	4	GLEDITSIA TRIACANTHOS VAR. INERMIS "IMPCOLE"	IMPERIAL THORNLESS HONEYLOCUST	2" CALIPER, BALLED & BURLAPPED (B&B) ROOT	30' W. X 60' H. DECIDUOUS TREE
	AC	2	AMELANCHIER CANADENSIS 'GLENFORM"	RAINBOW PILLAR SERVICEBERRY	#2 CONT.	10'W. X 20' H. DECID. TREE
	JH	9	JUNIPERUS HORIZONTALIS 'JAZZY JEWEL'	ANDORRA JUNIPER 'JAZZY JEWEL"	#2 CONT.	6' W. X2' H. EVERGREEN SHRUB
	PF	9	POTENTILLA FRUITICOSA 'GOLD DROP'	GOLD DROP CINQUEFOIL	#2 CONT.	3' W. X 2'H. DECID. SHRUB

NO	REVISION	DATE
1	TWP./CTY COMMENTS	05/13/20
2	----	----
3	----	----
4	----	----

COPYRIGHT @ 2020 BY R.J. FISHER & ASSOCIATES, INC.

R. J. FISHER & ASSOCIATES, INC.
SITE PLANNING ▫ CIVIL ENGINEERING ▫ LAND SURVEYS
1546 BRIDGE STREET, NEW CUMBERLAND, PA. 17070
PHONE: (717) 774-7534 FAX: (717) 774-7190
WWW.RJFISHERENGINEERING.COM

LANDSCAPE PLAN
FOR
LOT 3, BLUE RIDGE VILLAGE
LOCATED IN
LOWER PAXTON TOWNSHIP, DAUPHIN COUNTY, PA

DRAWING ID: 220014-LSCP
DATE: 04/08/20
SHEET: 5 OF 17

S:\JOBS\2022\220014\DWG\220014-LSCP.DWG Aug 3, 2022 - 10:58am

GENERAL LANDSCAPE NOTES

1. ALL LANDSCAPE MATERIALS SHALL BE PLACED AND PLANTED IN ACCORDANCE WITH THIS PLAN AND ALL APPLICABLE STANDARDS AND REQUIREMENTS OF THE LOWER PAXTON TOWNSHIP ZONING AND SUBDIVISION/ LAND DEVELOPMENT ORDINANCES AND THE LOWER PAXTON TOWNSHIP SHADE TREE COMMISSION WHERE APPLICABLE.

2. THE OWNER WILL BE RESPONSIBLE FOR THE PROPER MAINTENANCE OF ALL PLANT MATERIALS. ALL PLANTINGS WILL BE INSTALLED, MAINTAINED AND REPLACED BY THE OWNER, IF DEAD OR DISEASED, IN LOCATIONS AS SHOWN ON THIS APPROVED LANDSCAPE PLAN.

3. ALL PLANT MATERIALS SHALL BE PLANTED IN ACCORDANCE WITH GOOD NURSERY AND LANDSCAPING PRACTICES WITH ADEQUATE UNPAVED SURFACE AROUND EACH FOR WATER AND AIR AND SHALL BE PROPERLY PROTECTED BY CURBS, CURB STOPS, DISTANCE OR OTHER PROTECTIVE DEVICES TO PREVENT DAMAGE FROM VEHICLES. A MINIMUM VEGETATIVE AREA SHALL BE PROVIDED FOR ALL PLANT MATERIALS WHICH SHALL INCLUDE AT LEAST A 4-FOOT MINIMUM RADIUS OF PERVIOUS AREA AROUND ALL SIDES OF THE TRUNK OF EACH REQUIRED DECIDUOUS TREE OR SHRUB WITHIN OR ADJACENT TO A PARKING LOT. ANY AND ALL OTHER APPLICABLE STANDARDS ESTABLISHED BY THE TOWNSHIP SHALL ALSO APPLY.

4. ALL PLANT MATERIALS SHALL BE NURSERY GROWN IN A CLIMATE SIMILAR TO THAT OF THE LOCALITY OF THE SUBJECT TRACT.

5. ALL PLANT MATERIALS SHALL HAVE A NORMAL, SYMMETRICAL GROWTH HABIT AND SHALL BE SOUND, HEALTHY AND VIGOROUS AND SHALL BE FREE FROM DISEASE, INSECTS, INSECT EGGS AND LARVAE.

6. REQUIREMENTS FOR THE MEASUREMENT, BRANCHING, GRADING, QUALITY, BALLING AND BURLAPPING OF PLANT MATERIALS SHALL FOLLOW THE CODE OF STANDARDS RECOMMENDED BY THE AMERICAN NURSERY AND LANDSCAPE ASSOCIATION IN THE AMERICAN STANDARD FOR NURSERY STOCK, ANSIZ60, CURRENT EDITION, AS AMENDED. PLANTS SHALL BE SO TRAINED IN DEVELOPMENT AND APPEARANCE AS TO BE UNQUESTIONABLY SUPERIOR IN FORM, COMPACTNESS AND SYMMETRY. THEY SHALL BE SOUND, HEALTHY, VIGOROUS, WELL BRANCHED, DENSELY FOLIATED WHEN IN LEAF AND FREE OF DISEASE AND INSECTS OF ANY KIND.

7. LAYOUT OF PLANTS PRIOR TO PLANTING SHALL BE VERIFIED BY THE OWNER/DEVELOPER AND/OR THEIR REPRESENTATIVE.

8. PRIOR TO PLANTING, TREES SHALL BE INSPECTED BY THE OWNER/DEVELOPER AND/OR THEIR REPRESENTATIVE FOR INJURY TO TRUNKS, EVIDENCE OF INSECT INFESTATION, OR IMPROPER PRUNING.

9. ALL ROPES, STAVES, TAGS OR OTHER BINDINGS SHALL BE CUT OFF THE TOPS AND SIDES OF THE BALLS AND REMOVED FROM PITS. ALLROT-PROOF, ROT-RESISTANT, PLASTIC BURLAP AND TOP HALF OF WIRE BASKET (MINIMUM) BALL COVERINGS SHALL BE REMOVED BEFORE PLANTING.

10. DIAMETER OF PITS FOR TREES AND B+B SHRUBS SHALL BE AT LEAST 2 FEET GREATER THAN THE DIAMETER OF THE BALL OR SPREAD OF ROOTS. DIAMETER OF PITS FOR BARE-ROOTED TREES AND SHRUBS SHALL BE AT LEAST 1 FOOT GREATER THAN THE SPREAD OF ROOTS. NEVER CUT LEADER, PRUNE TOP OF BARE-ROOTED SHRUBS AND LATERAL BRANCHES OF TREE TO BALANCE LOSS OF ROOTS RESULTING FROM DIGGING.

11. PLANT SUBSTITUTIONS WILL BE PERMITTED ONLY UPON APPROVAL BY THE OWNER/DEVELOPER OR THE PROJECT LANDSCAPE ARCHITECT.

12. THE CONTRACTOR IS SOLELY RESPONSIBLE FOR IDENTIFYING ANY AND ALL UNDERGROUND UTILITY LOCATIONS, PRIOR TO DIGGING, BY PERFORMING A PA ONE-CALL OR AS MAY OTHERWISE BE REQUIRED. ANY AND ALL DAMAGE TO UNDERGROUND UTILITIES, WHETHER KNOWN OR UNKNOWN, IS AND WILL BE THE SOLE RESPONSIBILITY AND LIABILITY OF THE CONTRACTOR.

13. THE CONTRACTOR SHALL SPRAY PAINT OR OTHERWISE MARK ALL PROPOSED PLANTING BED LINES FOR OWNER APPROVAL PRIOR TO CUTTING IN PROPOSED BEDS.

LANDSCAPE REPLACEMENT NOTES

1. ALL NON-SURVIVING PLANTS SHALL BE REPLACED BY THE LANDSCAPE CONTRACTOR IN ACCORDANCE WITH ANY NEGOTIATED WARRANTY OR GUARANTEE PERIODS. AFTER ANY WARRANTY OR GUARANTEE PERIODS HAVE EXPIRED, THE LOT OWNER SHALL BE RESPONSIBLE FOR REPLACING ANY NON-SURVIVING PLANT MATERIALS WITH A LIKE-KIND SPECIES AT THE MINIMUM SIZES IDENTIFIED IN THE PLANT LIST FOUND ON THIS PLAN SHEET.

2. ALL LANDSCAPING WHICH IS REQUIRED BY LOWER PAXTON TOWNSHIP ORDINANCES IN EFFECT AT THE TIME OF PLAN APPROVALS, SHALL AND MUST BE PERPETUALLY MAINTAINED BY THE PROPERTY OWNER(S). ANY LANDSCAPING NEEDED TO MEET THE REQUIREMENTS OF ANY APPLICABLE ORDINANCES, WHICH DIES, IS REMOVED, OR IS SEVERELY DAMAGED SHALL AND MUST BE REPLACED BY THE CURRENT PROPERTY OWNER(S), ON A ONE-TO-ONE BASIS, AS SOON AS IS PRACTICAL CONSIDERING GROWING SEASONS, WITHIN A MAXIMUM OF 150 DAYS.

PLANTING & MULCH SPECIFICATION

PLANTING BED MULCH SPECIFICATION
1. ALL PROPOSED PLANTING BEDS, AS SHOWN, SHALL BE MULCHED WITH A 3 INCH MINIMUM DEPTH OF PREMIUM MULCH OF LIKE KIND, QUALITY, TEXTURE AND COLOR TO THE EXISTING MULCH WHICH CURRENTLY EXISTING IN CLOSE PROXIMITY TO THE PROPOSED IMPROVEMENTS.
2. ALL PROPOSED MULCH SHALL BE INSTALLED IN STRICT CONFORMANCE WITH THE SUPPLIER'S SUGGESTED RECOMMENDATIONS AND SPECIFICATIONS.

PLANT BACKFILL MIXTURE
1. TO CONSIST OF REMOVED TOPSOIL AND SUBGRADE FROM THE DUG HOLE ONLY, THOROUGHLY MIXED WITH ALL ROOTS AND STONES REMOVED PRIOR TO REPLACEMENT IN THE HOLE.

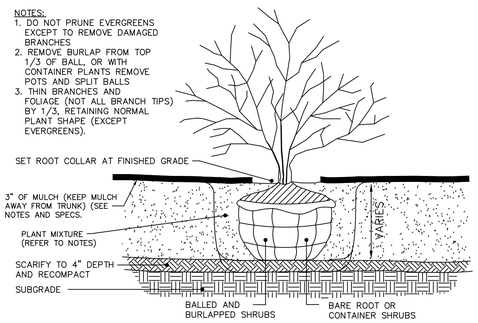

SHRUB PLANTING
NTS

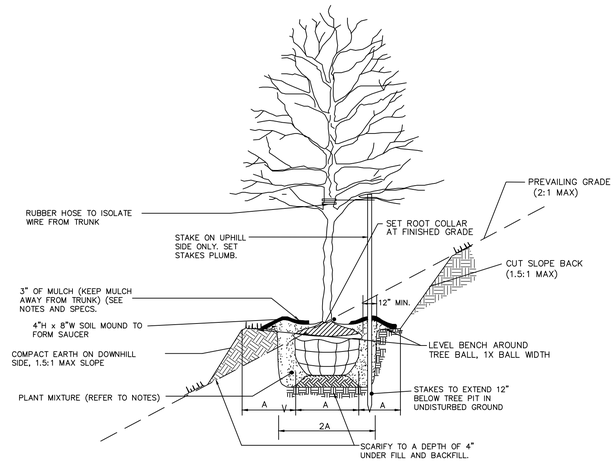

TREE ON SLOPE PLANTING
NTS

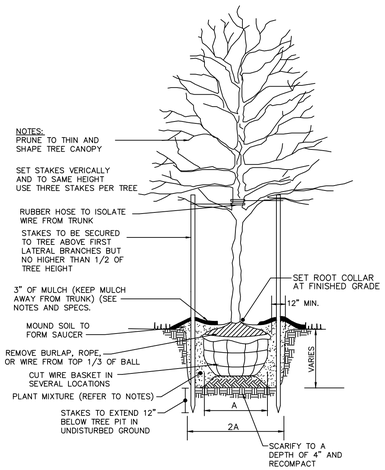

DECIDUOUS TREE PLANTING
NTS

NO	REVISION	DATE
1	TWP./CTY COMMENTS	05/13/20
2	----	----
3	----	----
4	----	----

COPYRIGHT @ 2020 BY R.J. FISHER & ASSOCIATES, INC.

R. J. FISHER & ASSOCIATES, INC.
SITE PLANNING ▫ CIVIL ENGINEERING ▫ LAND SURVEYS
1546 BRIDGE STREET, NEW CUMBERLAND, PA. 17070
PHONE: (717) 774-7534 FAX: (717) 774-7190
WWW.RJFISHERENGINEERING.COM

R. J. Fisher & Associates, Inc.

LANDSCAPE NOTES
FOR
LOT 3, BLUE RIDGE VILLAGE
LOCATED IN
LOWER PAXTON TOWNSHIP, DAUPHIN COUNTY, PA

DRAWING ID: 220014-DET
DATE: 04/08/20
SHEET: 6 OF 17

G:\PROJECTS\2020\220014\CAD\LDP\220014-LDP.dwg
XREF - J:\...\220014\CAD\XREF\220014-xHDT.dwg

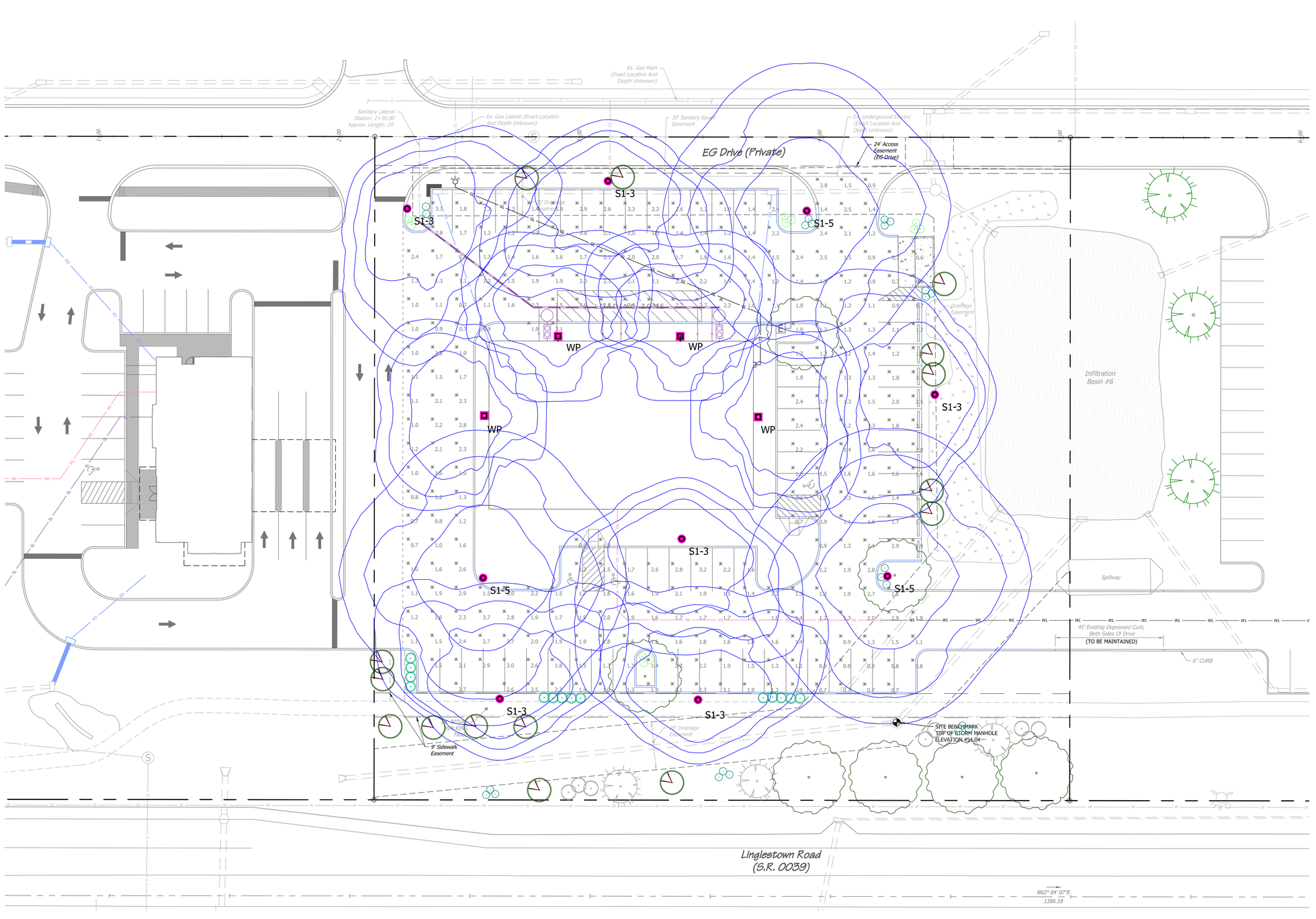

Schedule														
Symbol	Label	Quantity	Manufacturer	Catalog Number	Description	Lamp	Number Lamps	File Name	Lumens Per Lamp	Lumens Multiplier	Light Loss Factor	Wattage	Efficiency	Distribution
	S1-5	3	Holophane	WFCL2 P50 30K AS L5 S P7 PCLL HLA 14 F5J 15 P07 ABG BK	Washington FCO LED 2, P50, 3000K, Type 5, Optic	LED	1	WFCL2_P50_30K_XX_L5.ies	11151	1	0.9	139	100%	Type VS, Bug Rating: B4 - U0 - G2
	S1-3	6	Holophane	WFCL2 P50 30K ASL3 HSS S P7 PCLL HLA14 F5J 15 P07 ABG BK	Washington FCO LED 2, P50, 3000K, Type 3, Optic, With House Side Shield	LED	1	WFCL2_P50_30K_XX_L3_HSS.ies	7321	1	0.9	139	100%	Type IV, Short, Bug Rating: B2 - U0 - G2
	WP	4	Holophane	HLWPC2 P20 30K XX TFTM	Wallpack Full Cutoff LED, LED Performance Package P10, 3000 series CCT, Voltage, Forward Throw Medium	LED	1	HLWPC2_P20_30K_XX_TFTM.ies	5440	1	0.9	47	100%	Type IV, Short, Bug Rating: B1 - U0 - G2

Statistics						
Description	Symbol	Avg	Max	Min	Max/Min	Avg/Min
Total Area, Lot 3	+	1.7 fc	3.7 fc	0.6 fc	6.2:1	2.8:1

Notes	
1	Type S1 Meets Full Cutoff Classification
2	Design Area Meets Illumination Engineering Society's Recommended Practice For Parking Areas Per RP-20. Calculations For Parking Lot Can Be Provided

GRAPHIC SCALE

20 0 10 20 40 80

(IN FEET)
1 inch = 20 ft.

NO	REVISION	DATE
1	TWP./CTY COMMENTS	05/13/20
2	----	----
3	----	----
4	----	----

COPYRIGHT © 2020 BY
R.J. FISHER & ASSOCIATES, INC.

R. J. FISHER & ASSOCIATES, INC.
SITE PLANNING ▫ CIVIL ENGINEERING ▫ LAND SURVEYS
1546 BRIDGE STREET, NEW CUMBERLAND, PA. 17070
PHONE: (717) 774-7534 FAX: (717) 774-7190
WWW.RJFISHERENGINEERING.COM

FISHER & Associates, Inc.

LIGHTING PLAN
FOR
LOT 3, BLUE RIDGE VILLAGE
LOCATED IN
LOWER PAXTON TOWNSHIP, DAUPHIN COUNTY, PA

DRAWING ID: 220014-LIGHT
DATE: 04/08/20
SHEET: 7 OF 17

J:\PROJECTS\2020\220014\CAD\LDP-SUB\220014-LIGHT.DWG
7-LIGHT

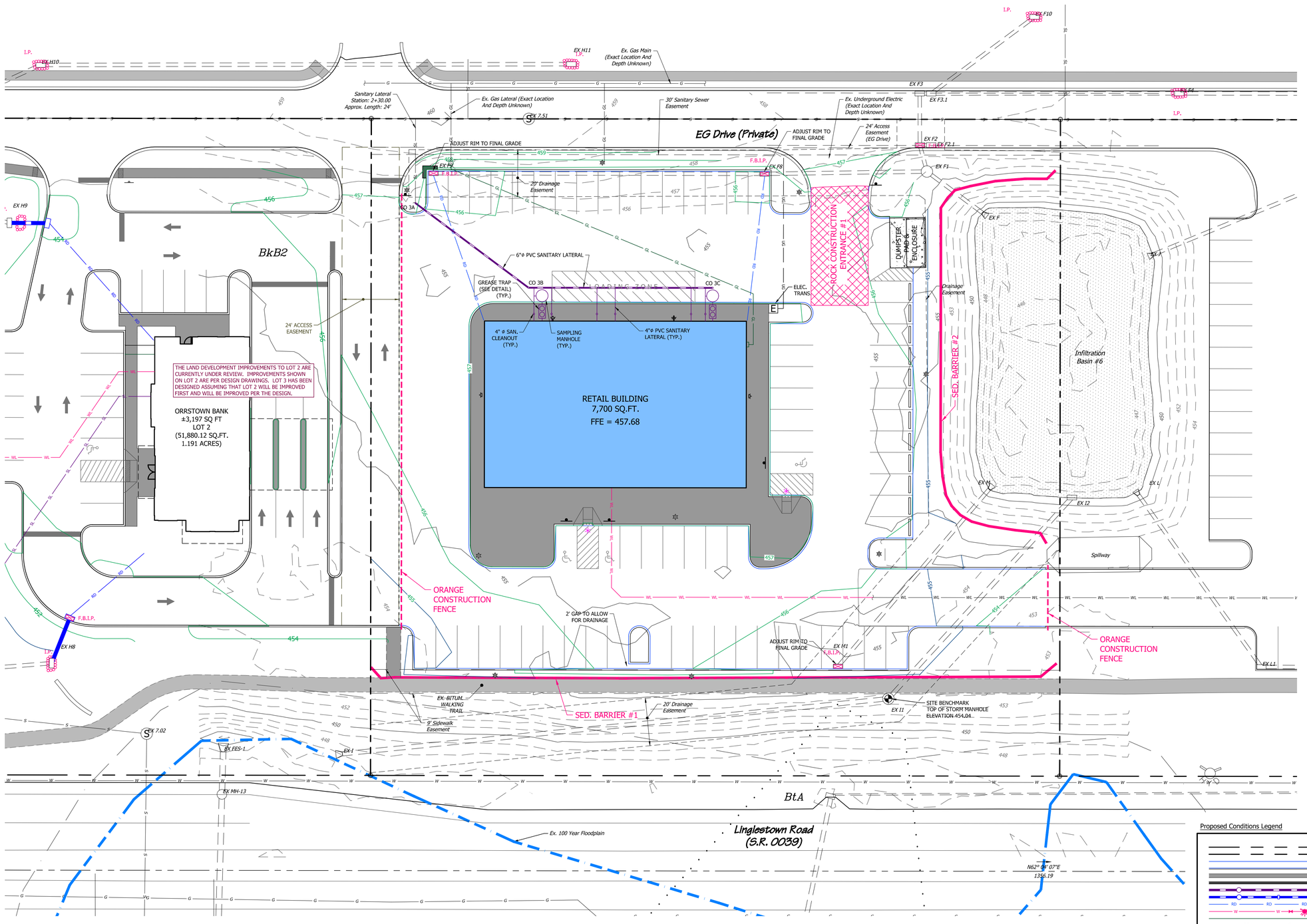

Proposed Conditions Legend

- Proposed Property Line
- Proposed Right-Of-Way
- Proposed Edge Of Pavement
- Proposed Curb
- Proposed Sidewalk
- Proposed Retaining Wall
- Proposed Sanitary Sewer Line, MH
- Proposed Storm Sewer Line, Inlet, MH
- Proposed Roof Drain
- Proposed Water Line, Valve, Hydrant, Meter
- Proposed Gas Line
- Proposed Overhead Utility
- Proposed Underground Utility
- Proposed Minor Contour
- Proposed Major Contour
- Limit of Disturbance
- Drainage Area
- Proposed Inlet Protection, Waterbar, Inlet I.D.
- Proposed Inlet Protection, Filter Bag

GRAPHIC SCALE

20 0 10 20 40 80

(IN FEET)

1 inch = 20 ft.

NO	REVISION	DATE
1	TWP./CTY COMMENTS	05/13/20
2	----	----
3	----	----
4	----	----

COPYRIGHT @ 2020 BY R.J. FISHER & ASSOCIATES, INC.

R. J. FISHER & ASSOCIATES, INC.
SITE PLANNING ▫ CIVIL ENGINEERING ▫ LAND SURVEYS
1546 BRIDGE STREET, NEW CUMBERLAND, PA. 17070
PHONE: (717) 774-7534 FAX: (717) 774-7190
WWW.RJFISHERENGINEERING.COM

EROSION & SEDIMENT POLLUTION CONTROL PLAN
FOR
LOT 3, BLUE RIDGE VILLAGE
LOCATED IN
LOWER PAXTON TOWNSHIP, DAUPHIN COUNTY, PA

DRAWING ID: 220014-ENS

DATE: 04/08/20

SHEET: 8 OF 17

Plotted: 13 MAY 2020 - 08:45AM
J:\JOBS\2020\220014\ENS\220014-ENS.DWG
8-ENS

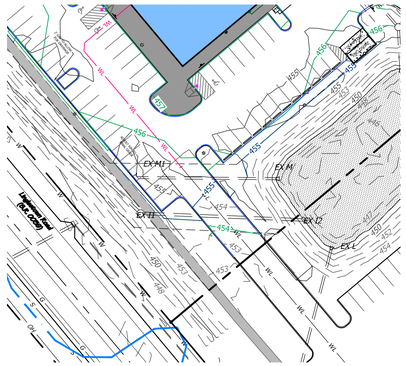

Profile View Of M2 To Ex M
Scale: 1"=50'

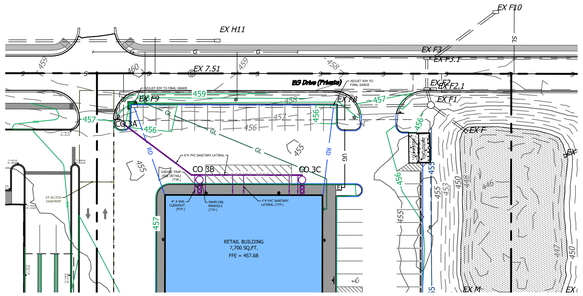

Profile View Of EX F9 To F
Scale: 1"=50'

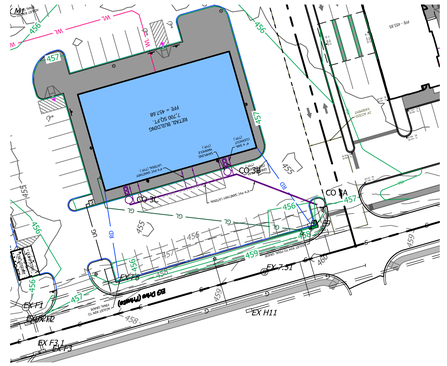

Profile View Of Lot 3 Sanitary Sewer Lateral
Scale: 1"=50'

Profile View Of M2 To EX M Sta: -0+50.00 - 1+75.00
Horizontal Scale: 1" = 50'
Vertical Scale: 1" = 5'

Profile View Of EX F9 To EX F Sta: -0+50.00 - 3+00.00
Horizontal Scale: 1" = 50'
Vertical Scale: 1" = 5'

Profile View Of Lot 3 Sanitary Sewer Lateral Sta: -0+50.00 - 2+00.00
Horizontal Scale: 1" = 50'
Vertical Scale: 1" = 5'

(IN FEET)
1 inch = 5 ft.

GRAPHIC SCALES

(IN FEET)
1 inch = 50 ft.

NO	REVISION	DATE
1	TWP./CTY COMMENTS	05/13/20
2	----	----
3	----	----
4	----	----

COPYRIGHT © 2020 BY
R.J. FISHER & ASSOCIATES, INC.

R. J. FISHER & ASSOCIATES, INC.
SITE PLANNING ▫ CIVIL ENGINEERING ▫ LAND SURVEYS
1546 BRIDGE STREET, NEW CUMBERLAND, PA. 17070
PHONE: (717) 774-7534 FAX: (717) 774-7190
WWW.RJFISHERENGINEERING.COM

SANITARY SEWER & STORM SEWER PROFILES
FOR
LOT 3, BLUE RIDGE VILLAGE
LOCATED IN
LOWER PAXTON TOWNSHIP, DAUPHIN COUNTY, PA

DRAWING ID: 220014-PRO
DATE: 04/08/20
SHEET: 9 OF 17

Date: 4/8/2020 3:56:15 PM User: JSEIP Drawing: P:\Projects\2020\220014\Plot\220014-PRO.DWG
9-PRO

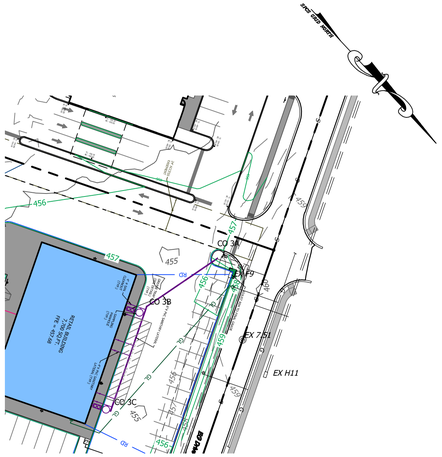

Profile View Of RD To EX F8
Scale: 1"=50'

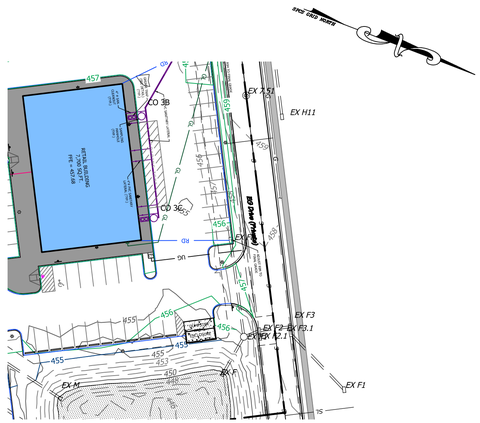

Profile View Of RD To EX F9 Sta: -0+75.00 - 1+25.00
Horizontal Scale: 1" = 50'
Vertical Scale: 1" = 5'

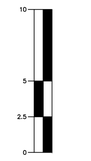

GRAPHIC SCALES

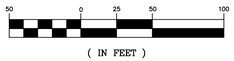

NO	REVISION	DATE
1	TWP./CTY COMMENTS	05/13/20
2	----	----
3	----	----
4	----	----

COPYRIGHT @ 2020 BY
R.J. FISHER & ASSOCIATES, INC.

R. J. FISHER & ASSOCIATES, INC.
SITE PLANNING ▫ CIVIL ENGINEERING ▫ LAND SURVEYS
1546 BRIDGE STREET, NEW CUMBERLAND, PA. 17070
PHONE: (717) 774-7534 FAX: (717) 774-7190
WWW.RJFISHERENGINEERING.COM

STORM SEWER PROFILES
FOR
LOT 3, BLUE RIDGE VILLAGE
LOCATED IN
LOWER PAXTON TOWNSHIP, DAUPHIN COUNTY, PA

DRAWING ID: 220014-PRO
DATE: 04/08/20
SHEET: 10 OF 17

R. J. Fisher & Associates, Inc.

I:\PROJECTS\2020\220014\CAD\LDP\SUB\220014-PROS.DWG
XREF: ..\XREF\220014-01.dwg

10-PRO

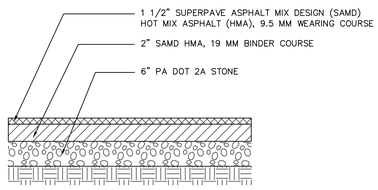

PARKING, ACCESS DRIVE & DRIVEWAY PAVING DETAIL
N.T.S.

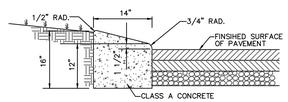

NOTES:
1. PROVIDE MATERIALS AND CONSTRUCTION MEETING THE REQUIREMENTS OF PUB. 408, SECTION 630 FOR PLAIN CONCRETE CURB AND DEPRESSED CURB, SECTION 640 FOR PLAIN CONCRETE CURB AND PLAIN CONCRETE CURB GUTTER.
2. SPACE CONTRACTION JOINTS IN UNIFORM LENGTHS OR SECTIONS.
3. PLACE 3/4-INCH PREMOLDED EXPANSION JOINT FILLER MATERIAL AT STRUCTURES AND AT THE END OF THE WORK DAY CUT MATERIAL TO CONFORM TO AREA ADJACENT TO CURB OR TO CONFORM TO CROSS SECTIONAL AREA OF CURB.

SLANT CURB DETAIL
N.T.S.

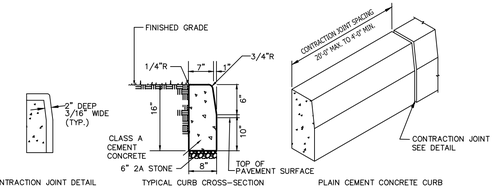

NOTES:
1. PROVIDE MATERIALS AND CONSTRUCTION MEETING THE REQUIREMENTS OF PUB. 408, SECTION 630 FOR PLAIN CONCRETE CURB AND DEPRESSED CURB, SECTION 640 FOR PLAIN CONCRETE CURB AND PLAIN CONCRETE CURB GUTTER.
2. SPACE CONTRACTION JOINTS IN UNIFORM LENGTHS OR SECTIONS.
3. PLACE 3/4-INCH PREMOLDED EXPANSION JOINT FILLER MATERIAL AT STRUCTURES AND AT THE END OF THE WORK DAY CUT MATERIAL TO CONFORM TO AREA ADJACENT TO CURB OR TO CONFORM TO CROSS SECTIONAL AREA OF CURB.

6" VERTICAL CONCRETE CURB DETAIL (LOT INTERIOR)
N.T.S.

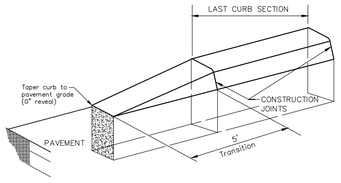

NOTES:
1. ALL CONSTRUCTION MATERIALS AND STRUCTURES SHALL BE IN CONFORMANCE WITH PENN DOT STANDARDS FOR ROADWAY CONSTRUCTION AS AMENDED AUGUST 28, 2000.
2. ALL CURBING SHALL BE IN CONFORMANCE WITH RC-64M STANDARDS.
3. SEE PLAN FOR LIMITS OF VERTICAL CURB INSTALLATION.
4. CURB TAPERS SHALL BE PROVIDED AT CURB ENDS WITH A 5' TRANSITION AND A 0" TERMINUS REVEAL.

CURB TAPER DETAIL
N.T.S.

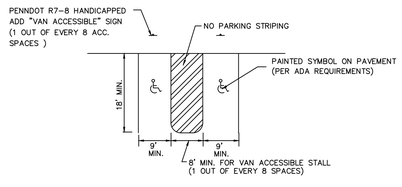

NOTE: HANDICAPPED RAMPS AND STALLS SHALL COMPLY WITH THE AMERICANS WITH DISABILITY ACT DESIGN STANDARDS

TYPICAL HANDICAP PARKING SPACE
N.T.S.

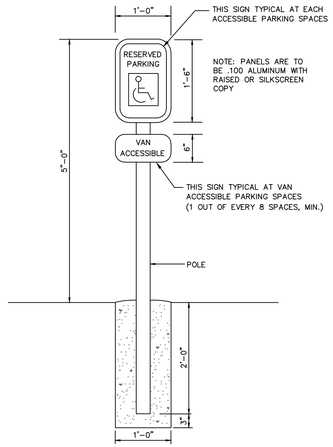

TYPICAL ACCESSIBLE PARKING SIGN DETAIL
N.T.S.

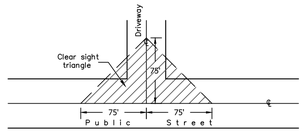

CLEAR-SIGHT TRIANGLE REQUIREMENTS AT DRIVEWAYS:
1. NO BUILDING OR OBSTRUCTION SHALL BE PERMITTED IN THIS AREA THAT WOULD OBSCURE THE VISION OF A MOTORIST.
2. GRADING AND / OR PLANTINGS (EXISTING THROUGH MATURE GROWTH) LESS THAN THREE (3) FEET ABOVE THE STREET GRADE ARE PERMITTED IN THE CLEAR-SIGHT TRIANGLE.

TYPICAL DRIVEWAY CLEAR SIGHT TRIANGLE (Lower Paxton Township)
N.T.S.

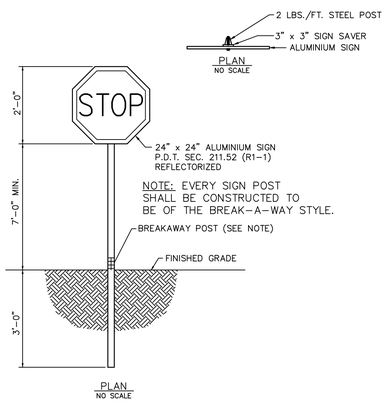

24" STOP SIGN Pa.D.O.T. SIGN, R1-1
NTS

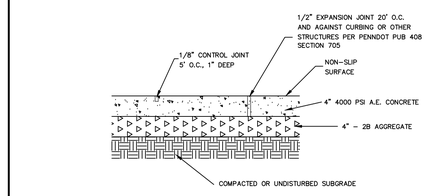

NOTES:
1. MINIMUM CROSS SLOPE TOWARD THE STREET: ¼"/FT.
2. ALL CONCRETE SHALL BE CLASS A.
3. CURB RAMPS MUST BE INSTALLED WHERE INDICATED ON THE SITE PLAN, PER ADA REQUIREMENTS.
4. SEE SUBDIVISION PLAN FOR WALK LOCATIONS.
5. WALK WIDTH IS 5' FEET. MONOLITHIC TO FACE OF CURB

CONCRETE SIDEWALK DETAIL
NTS

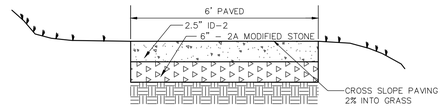

BITUMINOUS WALKING TRAIL
N.T.S.
NOTES:
ALONG LINGELSTOWN ROAD

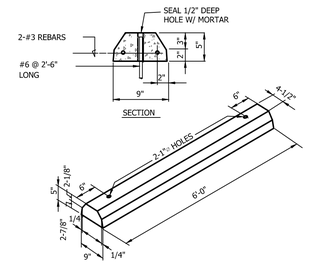

PRECAST CONCRETE WHEEL STOP DETAIL
N.T.S.

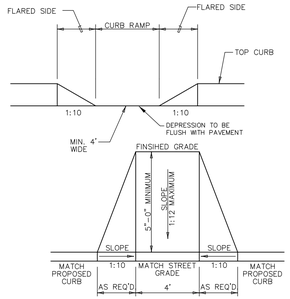

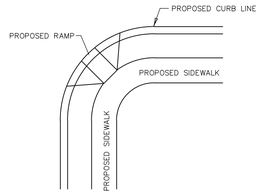

CONCRETE CURB RAMP FOR HANDICAP ACCESS
N.T.S.

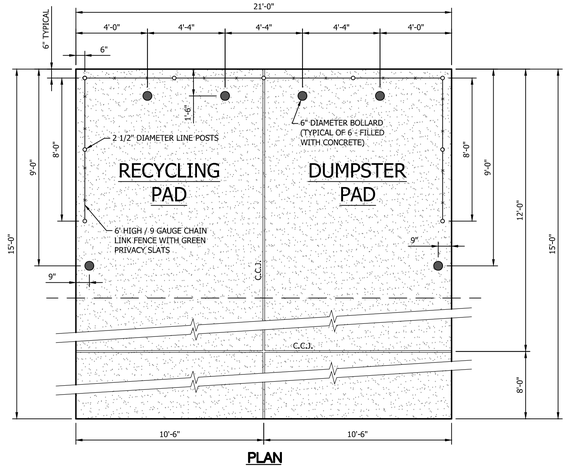

PLAN

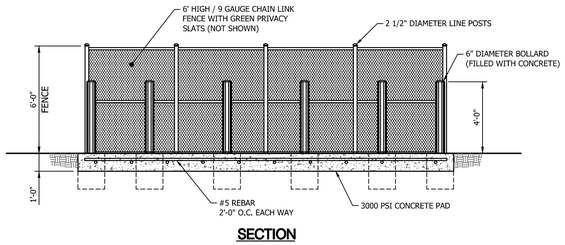

SECTION

DUMPSTER PAD WITH ENCLOSURE DETAIL
N.T.S.

NO	REVISION	DATE
1	TWP./CTY COMMENTS	05/13/20
2	----	----
3	----	----
4	----	----

COPYRIGHT @ 2020 BY R.J. FISHER & ASSOCIATES, INC.

R. J. FISHER & ASSOCIATES, INC.
SITE PLANNING ▫ CIVIL ENGINEERING ▫ LAND SURVEYS
1546 BRIDGE STREET, NEW CUMBERLAND, PA. 17070
PHONE: (717) 774-7534 FAX: (717) 774-7190
WWW.RJFISHERENGINEERING.COM

MISCELLANEOUS DETAILS
FOR
LOT 3, BLUE RIDGE VILLAGE
LOCATED IN
LOWER PAXTON TOWNSHIP, DAUPHIN COUNTY, PA

DRAWING ID: 220014-DET
DATE: 04/08/20
SHEET: 11 OF 17

J:\PROJECTS\2020\220014\CAD\DWG\220014-MISC DET.DWG
XREF: ..\..\2200\4CAD\XREF\220014-ref01.dwg
11-DET

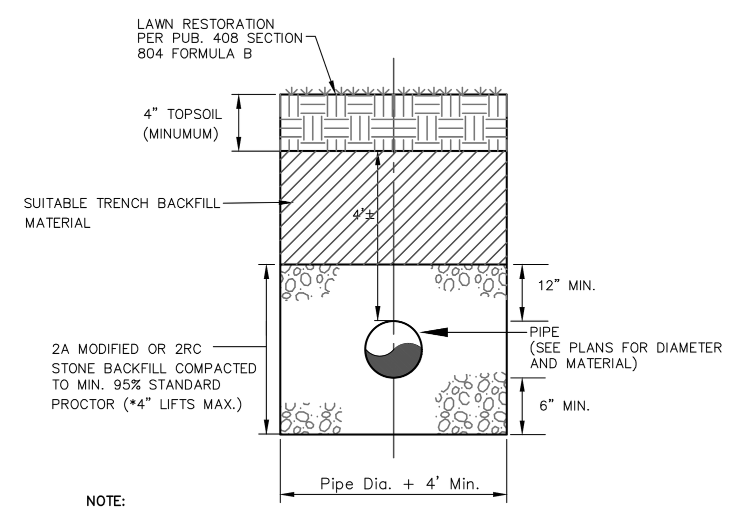

NOTE:
1. USE THIS DETAIL FOR TRENCH RESTORATION OUTSIDE THE SHOULDER OR PAVEMENT OF A PENN DOT STATE RIGHT-OF-WAY.
2. ALL MATERIALS AND INSTALLATION PROCEDURES SHALL CONFORM TO PENN DOT PUBLICATION 408, MOST RECENT AMENDMENT.
*3. BACKFILL MAY COMPACTED IN 8" LIFTS IF VIBRATORY EQUIPMENT IS USED.

DETAIL FOR TRENCHES
NTS

NOTES:
1. DESIGN AND REQUIREMENTS SHALL BE PER THE WATER SUPPLY COMPANY.

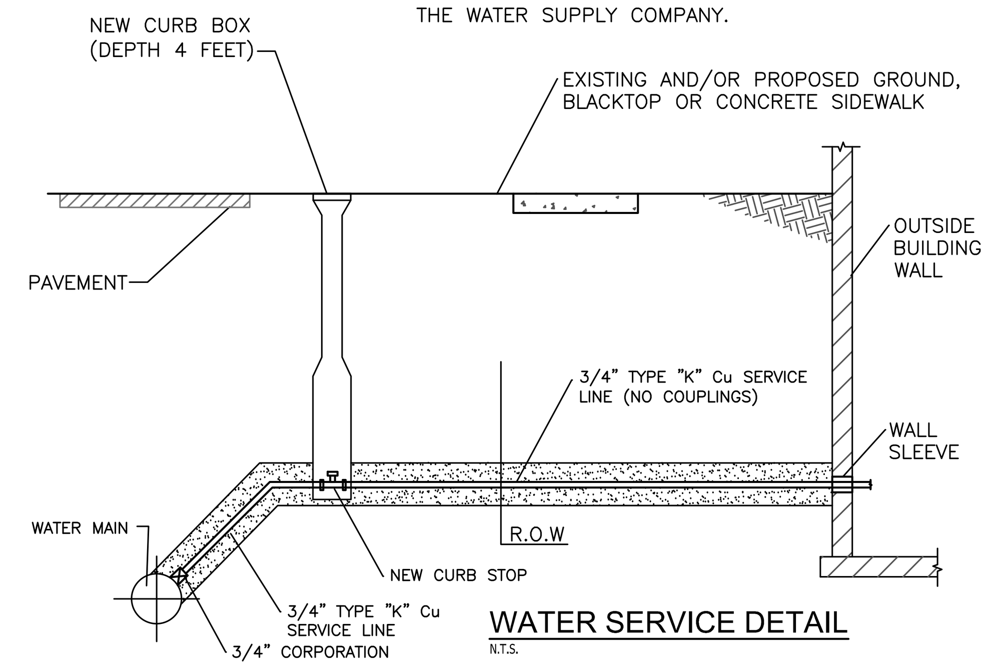

WATER SERVICE DETAIL
N.T.S.

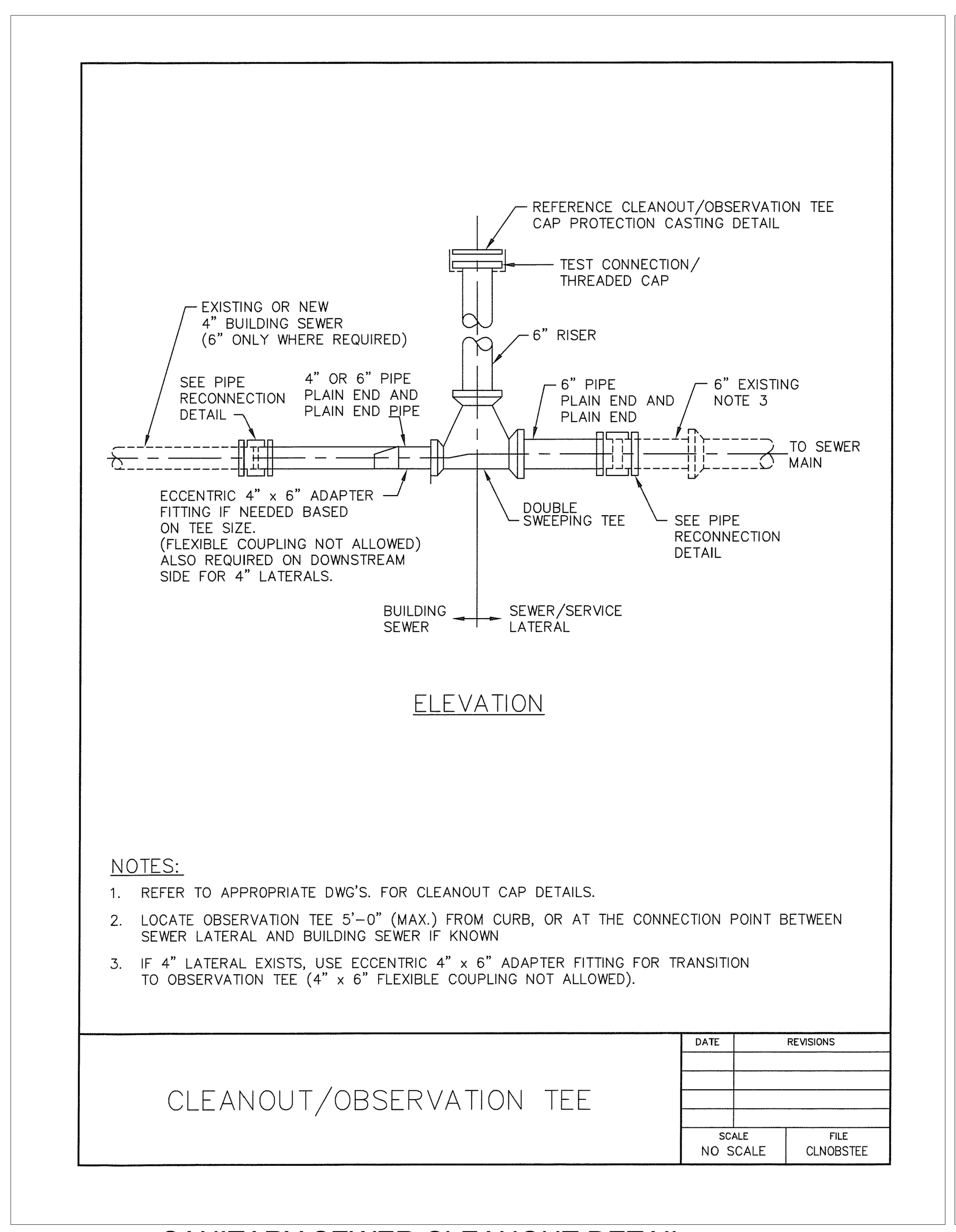

SANITARY SEWER CLEANOUT DETAIL
N.T.S.

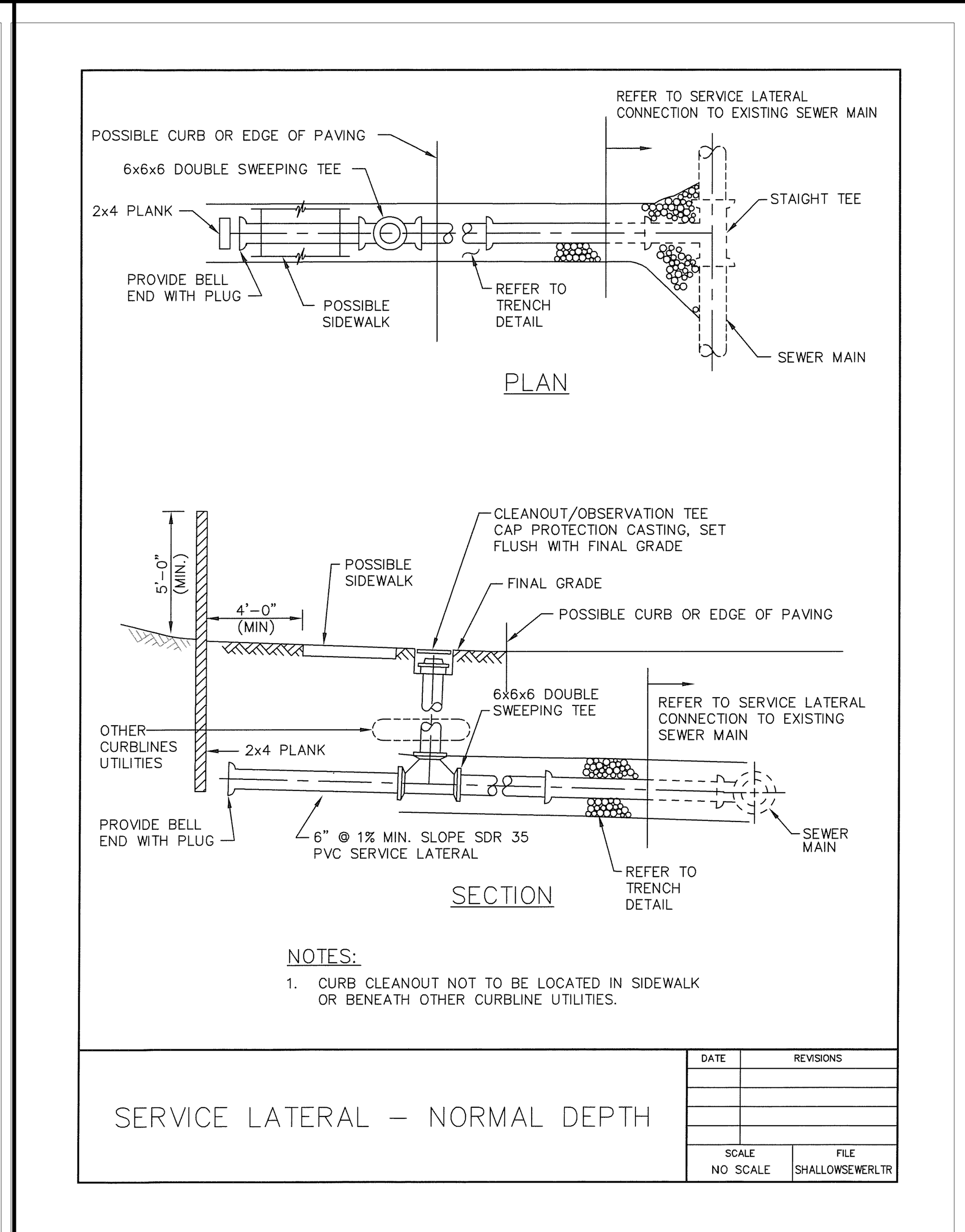

SANITARY SEWER SERVICE DETAIL
N.T.S.

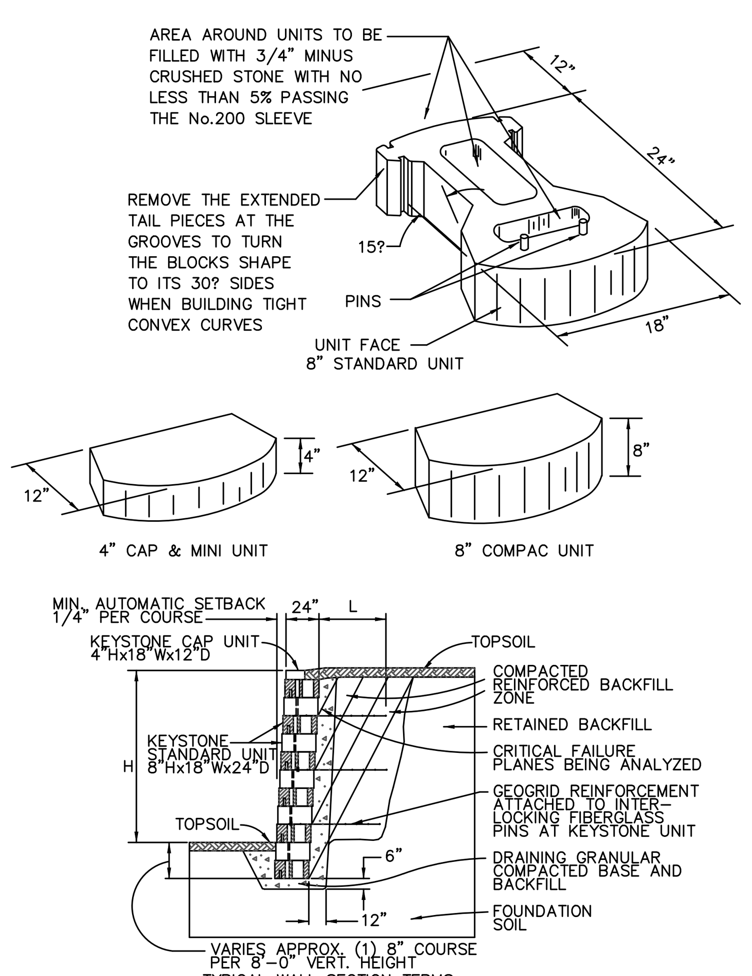

NOTE:
THIS DETAIL IS A REPRESENTATION ONLY. ACTUAL DESIGN OF THE RETAINING WALL SHALL BE AS CERTIFIED BY A PROFESSIONAL ENGINEER IN ACCORDANCE WITH MANUFACTURER'S DESIGN REQUIREMENTS..

"KEYSTONE" RETAINING WALL OPTION DETAIL
N.T.S.

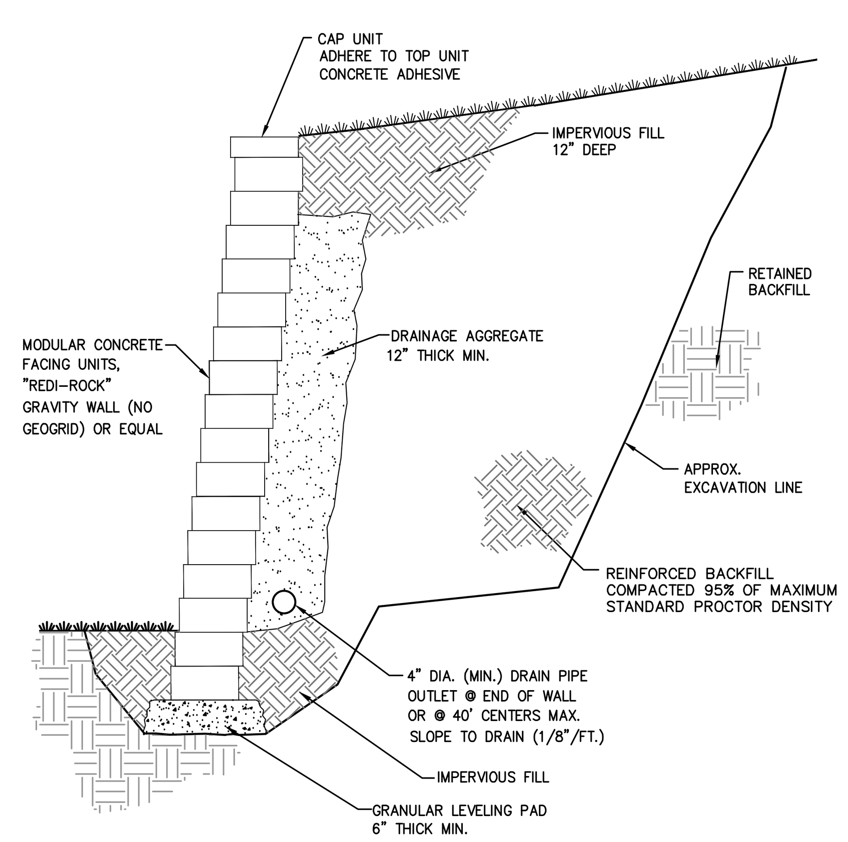

NOTE:
THIS DETAIL IS A REPRESENTATION ONLY. ACTUAL DESIGN OF THE RETAINING WALL SHALL BE AS CERTIFIED BY A PROFESSIONAL ENGINEER IN ACCORDANCE WITH MANUFACTURER'S DESIGN REQUIREMENTS..

TYPICAL SECTION-POSSIBLE REINFORCED RETAINING WALL
NOT TO SCALE

STORMWATER BMP OPERATION AND MAINTENANCE PLAN

The stormwater Best Management Practices (BMPs) as shown on this plan shall be maintained to function as designed as per the procedures described below. Facilities located outside the public right-of-ways shall be owned and maintained by the owners of the development.

The facilities are to remain permanent and can only be removed or altered after approval by one or more of the following entities which may have jurisdiction: Lower Paxton Township; Dauphin County Conservation District; and/or PA DEP.

The following facilities located outside the public right-of-ways shall be maintained to the original design and dimensions shown on the design plans, approved by Lower Paxton Township, until such a time as an amended plan is approved by the Township.

- Infiltration Basins, Emergency Spillways & Outlet Structures (previous Preliminary / Phase 1 Plan development/ developer responsibility)
- Stormwater Inlets, Manholes, & Pipes
- Riprap Aprons (previous Preliminary / Phase 1 Plan development/ developer responsibility)

For any structure facility (pipe, inlet, manhole), it must be repaired or replaced if damaged more than superficially, in a way that is a safety hazard, if structurally unsound, or if not substantially performing as it is intended per the original design. The responsible owners shall keep a record of any repaired or replaced facility, including costs, dates, materials removed, materials placed, and the contractor(s) information.

Inspection and maintenance tasks for stormwater inlets, manholes, pipes & swales:

- Examine annually at a minimum. Remove man-made trash and dispose of properly.
- Examine inlet bottoms via grates, for accumulated debris. Remove accumulated grit and debris. Check for any obvious structural deterioration.
- The swales shall be maintained as turf grass or meadow, being mowed at least several times per year.
- Any erosion shall be re-stabilized with rock, or seeding (seed, mulch and matting), or sod that is watered until established; rock should be placed in non-growing seasons, even if temporary.
- All inlets, storm piping, swales and drainage structures shall be kept free of any obstructions and foreign material that would cause disruption of water flow in a manner not designed for the facility, such as sediment, vegetation, wood, sand, debris, or vegetative growth in excess of 12 inches if not part of the landscape design. Removal of sediment/debris shall take place when the area has dried, if possible. Man-made trash shall be disposed of properly in containers collected by a licensed commercial trash hauler.
- All impervious surfaces shall be maintained clean of oiil, fuel or other toxic spills, in accordance with State, Federal or local regulations.

HOLOPHANE
LEADER IN LIGHTING SOLUTIONS
An Acuity Brands Company

Catalog Number	WFCL2 P50 30K AS BK L5 S P7 PCLL HLA 14 F5J 16 P07 ABG BK
Type:	Notes:

SPECIFICATIONS
FIXTURE
•[WFCL2 P50 30K AS BK L5 S P7 PCLL]
Prefix: WFCL2
Source & Wattage: LED Performance Package P50
Color Temperature: 3000 series CCT
Voltage: Auto-sensing voltage (120 thru 277)
Finish: Black
Optics: Type 5 Full Cutoff LED distribution
Finial: Spike Finial
Prewired Leads: None
Photocontrol Receptacle: NEMA Twist Lock Dimming photocontrol receptacle - 7 PIN.
Photocontrol: Extended life option with AS (120-277V only)
NEMA Label: None
Part Night Dimming: None
Surge Protection: None
Adjustable Output: None
Factory Programmed Driver: None
Shield: None
Surge Protection Accessory: None
Shield Accessory: None
Luminaire EPA: 1.72
Luminaire Weight: 57

POLE
Hamilton Aluminum Pole
•[HLA 14 F5J 16 P07 ABG BK]
Prefix: Hamilton, Aluminum Pole
Height: 14 feet (Actual Height: 14'-0")
Shaft Style: F5J 5 inch diameter Fluted, .25 wall
Base: 16 inch Round Base
Tenon: 3 X 3 Tenon
Pole Mounting: Anchor bolts, galvanized steel
Finish: Black Powder Coat
Base EPA: 4.21041666667
Base Weight: 78
Anchor Bolt: AB-31-4

Your Assembly Wind Load status: Pass
Passed for wind speed: 90 MPH
For further details, review the Structural Analysis Report.

Hamilton Aluminum Pole
Utility Washington FCO LED

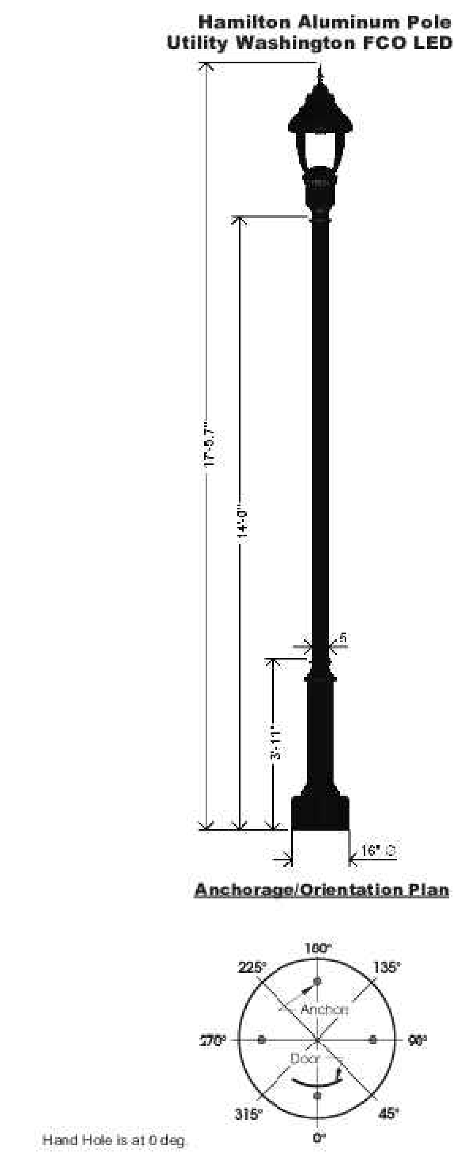

Customer Approval: Job Name: Blu Ridge
Client Name: Triple Crown
signature date Created By: Ken Roth Date: 02-Jan-19
Catalog #WFCL2 P50 30K AS BK L5 S P7 PCLL HLA 14 F5J 16 P07 ABG BK Dwg. # HLP-50508 Page: 2 of 2

WDGE2 LED
Architectural Wall Sconce

Catalog Number
Notes
Type
Hit the Tab key or mouse over the page to see all interactive elements.

Introduction
The WDGE LED family is designed to meet specifier's every wall-mounted lighting need in a widely accepted shape that blends with any architecture. The clean rectilinear design comes in four sizes with lumen packages ranging from 1,200 to 25,000 lumens, providing a true site-wide solution. Embedded with nLight® AIR wireless controls, the WDGE family provides additional energy savings and code compliance.

WDGE2 delivers up to 6,000 lumens with a soft, non-pixelated light source, creating a visually comfortable environment. When combined with multiple integrated emergency battery backup options, including an 18W cold temperature option, the WDGE2 becomes the ideal wall-mounted lighting solution for pedestrian scale applications in any environment.

Specifications
Depth (D1): 7"
Depth (D2): 1.5"
Height: 9"
Width: 11.5"
Weight: (without options) 13.5 lbs

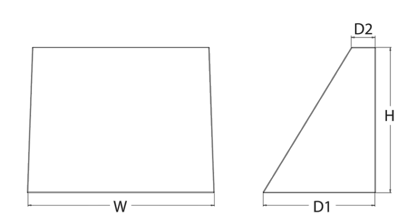

WDGE LED Family Overview

Luminaire	Standard EM, 0°C	Cold EM, -20°C	Sensor	Lumens (4000K) P1	P2	P3	P4	P5	P6
WDGE1 LED	4W	--	--	1,200	2,000	--	--	--	--
WDGE2 LED	10W	18W	Standalone / nLight	1,200	2,000	3,000	4,500	6,000	--
WDGE3 LED	15W	18W	Standalone / nLight	7,500	8,500	10,000	12,000	--	--
WDGE4 LED	--	--	Standalone / nLight	12,000	16,000	18,000	20,000	22,000	25,000

Ordering Information **EXAMPLE:** WDGE2 LED P3 40K 80CRI VF MVOLT SRM DDBXD

Series	Package	Color Temperature	CRI	Distribution	Voltage	Mounting
WDGE2 LED	P1[1] P1SW P2[1] P2SW P3[1] P3SW P4[1] Door with small window (SW) is required to accommodate sensors. See page 2 for more details. P5[1]	27K 2700K 30K 3000K 35K 3500K 40K 4000K 50K[2] 5000K	80CRI 90CRI	VF Visual comfort forward throw VW Visual comfort wide	MVOLT 347[3] 480[3]	Shipped included: SRM Surface mounting bracket; ICW Indirect Canopy/Ceiling Washer bracket (dry/damp locations only)[7] Shipped separately: AWS 3/8inch Architectural wall spacer; BBW Surface-mounted back box; PBBW Premium surface-mounted back box (top, left, right conduit entry)

Options
E4WH Emergency battery backup, CEC compliant (4W, 0°C min)
E10WH Emergency battery backup, CEC compliant (10W, 5°C min)
E20WC Emergency battery backup, CEC compliant (18W, -20°C min)
PE[4] Photocell, Button Type
DS[5] Dual switching (comes with 2 drivers and 2 light engines; see page 3 for details)
DMG[6] 0-10V dimming wires pulled outside fixture (for use with an external control, ordered separately)
BCE Bottom conduit entry for premium back box (PBBW). Total of 4 entry points.

Standalone Sensors/Controls (only available with P1SW, P2SW & P3SW)
PIR Bi-level (100/35%) motion sensor for 8-15' mounting heights. Intended for use on switched circuits with external dusk to dawn switching.
PIRH Bi-level (100/35%) motion sensor for 15-30' mounting heights. Intended for use on switched circuits with external dusk to dawn switching
PIR1FC3V Bi-level (100/35%) motion sensor for 8-15' mounting heights with photocell pre-programmed for dusk to dawn operation.
PIRH1FC3V Bi-level (100/35%) motion sensor for 15-30' mounting heights with photocell pre-programmed for dusk to dawn operation.
Networked Sensors/Controls (only available with P1SW, P2SW & P3SW)
NLTAIR2 PIR nLightAIR Wireless enabled bi-level motion/ambient sensor for 8-15' mounting heights.
NLTAIR2 PIRH nLightAIR Wireless enabled bi-level motion/ambient sensor for 15-30' mounting heights.
See page 4 for out of box functionality

Finish
DDBXD Dark bronze
DBLXD Black
DNAXD Natural aluminum
DWHXD White
DSSXD Sandstone
DDBTXD Textured dark bronze
DBLBXD Textured black
DNATXD Textured natural aluminum
DWHGXD Textured white
DSSTXD Textured sandstone

LITHONIA LIGHTING. COMMERCIAL OUTDOOR One Lithonia Way • Conyers, Georgia 30012 • Phone: 1-800-705-SERV (7378) • www.lithonia.com WDGE2 LED Rev. 03/31/20
© 2019-2020 Acuity Brands Lighting, Inc. All rights reserved.

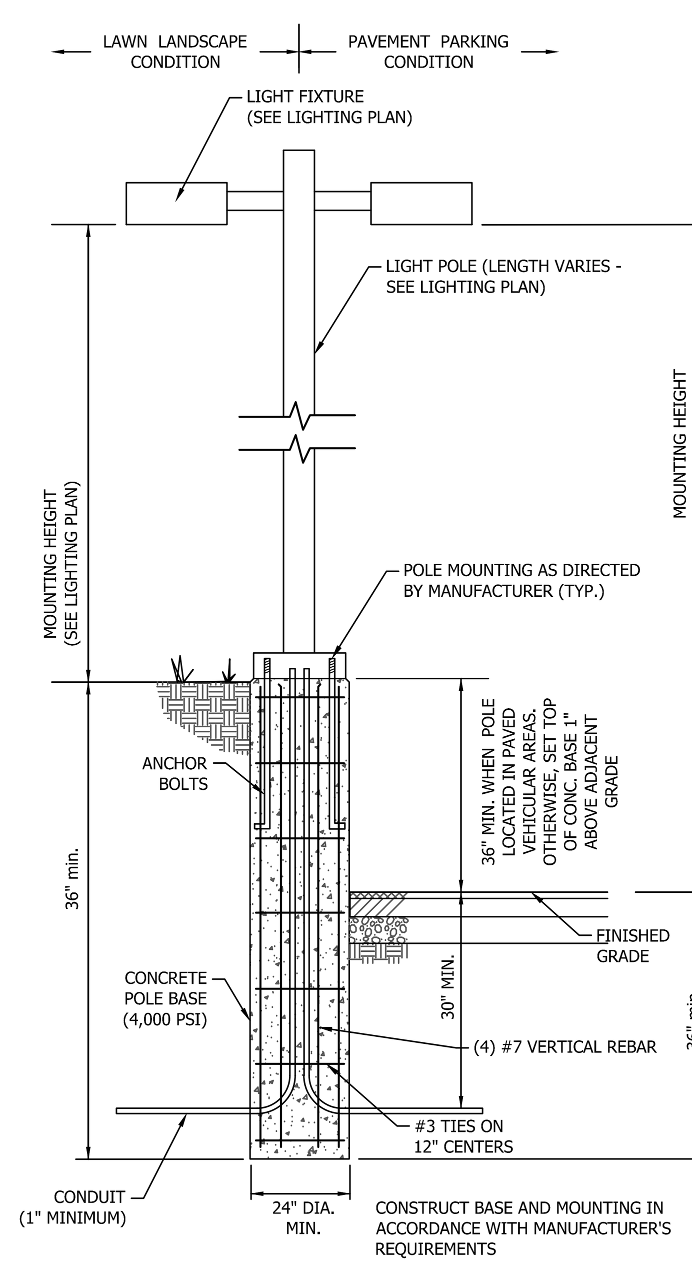

NOTES:
1. SEE ELECTRICAL DRAWINGS FOR CONDUIT LOCATIONS.
2. NUMBER AND SIZE OF ANCHOR BOLTS PER MANUFACTURER'S REQUIREMENTS.
3. FOUNDATION INFORMATION AND DESIGN TO BE PROVIDED BY THE LIGHTING DESIGNER.
4. POLES MUST BE GROUNDED.

LIGHT STANDARD BASE DETAIL (RAISED MOUNT)
N.T.S.

NO.	REVISION	DATE
1	TWP/CTY COMMENTS	05/13/20
2	----	----
3	----	----
4	----	----

COPYRIGHT @ 2020 BY R.J. FISHER & ASSOCIATES, INC.

R. J. FISHER & ASSOCIATES, INC.
SITE PLANNING ▫ CIVIL ENGINEERING ▫ LAND SURVEYS
1546 BRIDGE STREET, NEW CUMBERLAND, PA. 17070
PHONE: (717) 774-7534 FAX: (717) 774-7190
WWW.RJFISHERENGINEERING.COM

PCSM, SANITARY SEWER & UTILITY DETAILS
FOR
LOT 3, BLUE RIDGE VILLAGE
LOCATED IN
LOWER PAXTON TOWNSHIP, DAUPHIN COUNTY, PA

DRAWING ID: 220014-DET
DATE: 04/08/20
SHEET: 12 OF 17

J:\PROJECTS\2020\220014\CAD\LDP-SUB\220014-DET.DWG
XREF: ..\..\..\220014\CAD\XREF\220014-xrDTL.dwg
12-DET

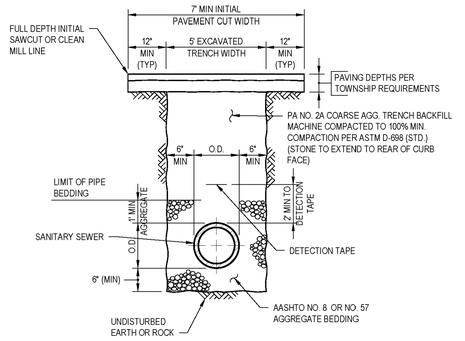

TRENCH DETAIL FOR NEW PUBLIC / PRIVATE STREETS FOLLOWING GRADING WHEN SEWER IS INSTALLED ON UNDISTURBED EARTH OR ROCK

DATE	REVISIONS
JUNE, 2017	UPDATED STANDARD DETAILS
SCALE: NO SCALE	FILE: TR-1B

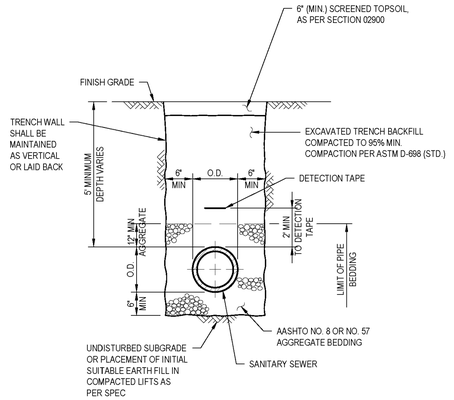

TRENCH DETAIL IN UNPAVED AREAS

DATE	REVISIONS
JUNE, 2017	UPDATED STANDARD DETAILS
SCALE: NO SCALE	FILE: TR-2

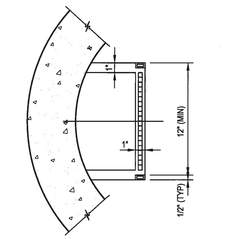

PLAN

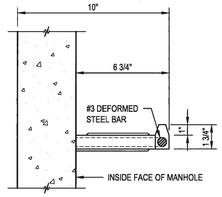

SECTIONAL ELEVATION
REINFORCED PLASTIC

MANHOLE STEPS

DATE	REVISIONS
SCALE: NO SCALE	FILE: MH-8

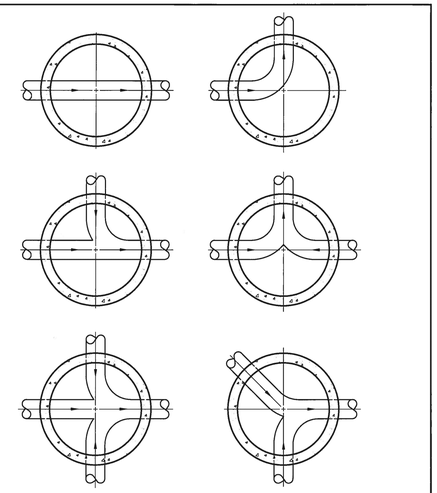

NOTE:

1. KEEP CURVE(S) TO A MINIMUM TO FACILITATE INSERTION AND REMOVAL OF TEST PLUGS AND INTERNAL INSPECTION EQUIPMENT.

TYPICAL PLAN OF MANHOLE CHANNELS

DATE	REVISIONS
OCT. 2016	UPDATED STANDARD DETAILS
SCALE: NO SCALE	FILE: MH-9

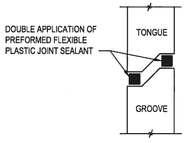

SECTION

MANHOLE GASKET

DATE	REVISIONS
SCALE: NO SCALE	FILE: MH-10

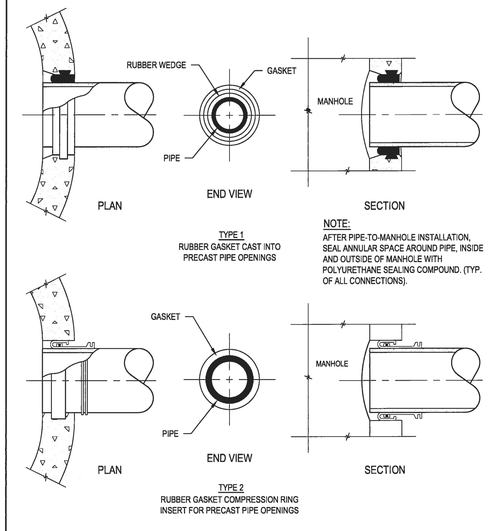

MANHOLE PIPE GASKETS

DATE	REVISIONS
OCT, 2016	UPDATED STANDARD DETAILS
SCALE: NO SCALE	FILE: MH-11

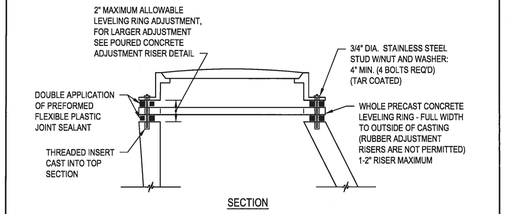

SECTION

NOTES:

1. ALL NON-SHRINK, NON-METALLIC GROUT SHALL BE TROWELED SMOOTH.
2. LEVELING AND/OR GRADE RINGS IN EXCESS OF 2-INCHES ARE NOT PERMITTED. IN LIEU OF LEVELING/GRADE RINGS, PROVIDE "POURED CONCRETE ADJUSTMENT RISER".

LEVELING RINGS AND BOLTED FRAME DETAILS

DATE	REVISIONS
OCT, 2016	UPDATED STANDARD DETAILS
SCALE: NO SCALE	FILE: MH-13

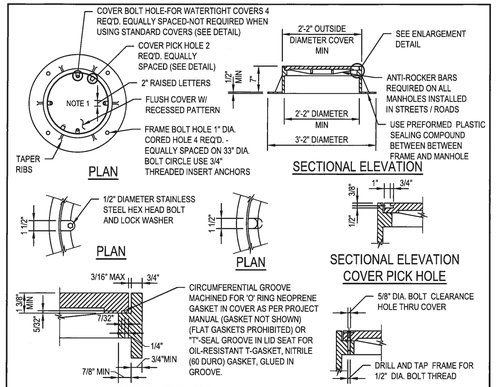

NOTES:

1. LETTERING SHALL BE "SEWER".
2. ALL MANHOLE FRAMES AND COVERS SHALL BE FOR HEAVY DUTY TRAFFIC, AASHTO HIGHWAY LOADING CLASS HS-20.
3. USE NEENAH FOUNDRY COMPANY, MODEL 1642 381-1 (STANDARD), MODEL 1916F (WATERTIGHT) AND MODEL 16422018 (LOW PROFILE). NO SUBSTITUTIONS WILL BE ACCEPTED.
4. APPLY LUBRICANT TO COVER BOLTS. USE 20 - 30 FT/LBS. MAXIMUM TORQUE.
5. APPLY ANTI-SEIZE COMPOUND TO ALL THREADED SURFACES.
6. LOW PROFILE MANHOLE FRAME AND COVERS SHALL ONLY BE USED TO COMPLY WITH LIMITATIONS ON RISER ADJUSTMENTS, AND AS APPROVED BY THE ENGINEER.
7. WATERTIGHT FRAME AND COVER TO BE USED IN ALL RIGHTS-OF-WAY OR AS DIRECTED BY OWNER.

STANDARD OR WATERTIGHT SEWER FRAME AND COVER

DATE	REVISIONS
OCT, 2016	UPDATED STANDARD DETAILS
SCALE: NO SCALE	FILE: MH-15A

NO	REVISION	DATE
1	TWP./CTY COMMENTS	05/13/20
2	----	----
3	----	----
4	----	----

COPYRIGHT @ 2020 BY R.J. FISHER & ASSOCIATES, INC.

R. J. FISHER & ASSOCIATES, INC.
SITE PLANNING ▫ CIVIL ENGINEERING ▫ LAND SURVEYS
1546 BRIDGE STREET, NEW CUMBERLAND, PA. 17070
PHONE: (717) 774-7534 FAX: (717) 774-7190
WWW.RJFISHERENGINEERING.COM

SANITARY SEWER DETAILS
FOR
LOT 3, BLUE RIDGE VILLAGE
LOCATED IN
LOWER PAXTON TOWNSHIP, DAUPHIN COUNTY, PA

DRAWING ID: 220014-DET
DATE: 04/08/20
SHEET: 13 OF 17

J:\PROJECTS\2020\220014\CAD\DET\220014-DET.dwg
XREF: J:\...\220014\CAD\XREF\220014-XDTL.dwg
13-DET

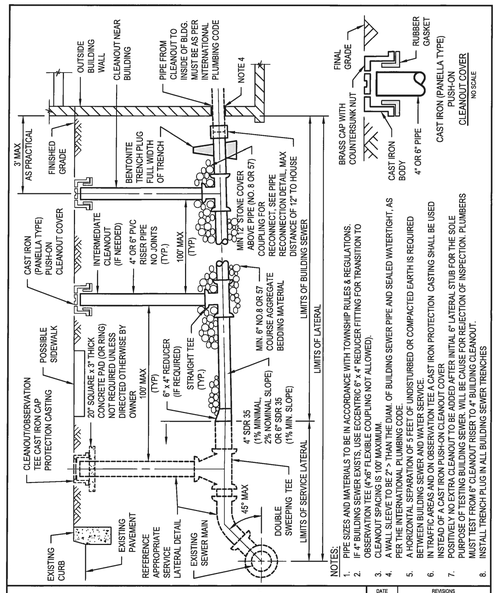

BUILDING SEWER AND/OR SERVICE LATERAL INSTALLATION/REPLACEMENT

DATE	REVISIONS
OCT, 2018	UPDATED STANDARD DETAILS
SCALE: NO SCALE	FILE: LAT-4

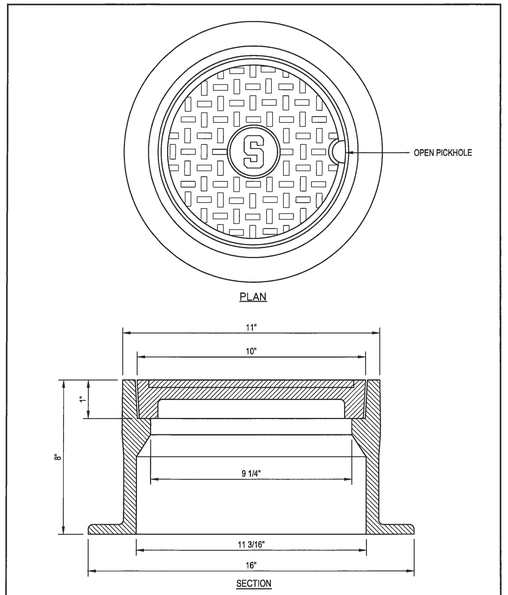

CLEANOUT/OBSERVATION TEE CAP PROTECTION CASTING

DATE	REVISIONS
OCT, 2018	UPDATED STANDARD DETAILS
SCALE: NO SCALE	FILE: LAT-5

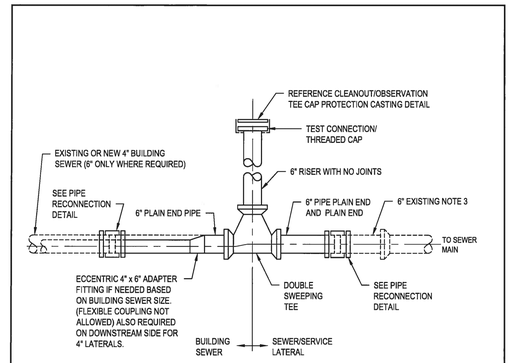

ELEVATION

NOTES:
1. REFER TO APPROPRIATE DWG'S. FOR CLEANOUT CAP DETAILS.
2. LOCATE OBSERVATION TEE 5'-0" (MAX.) FROM CURB, OR AT THE CONNECTION POINT BETWEEN SEWER LATERAL AND BUILDING SEWER IF KNOWN.
3. IF 4" LATERAL EXISTS, USE ECCENTRIC 4" x 6" ADAPTER FITTING FOR TRANSITION TO OBSERVATION TEE (4" x 6" FLEXIBLE COUPLING NOT ALLOWED).

OBSERVATION TEE

DATE	REVISIONS
OCT, 2018	UPDATED STANDARD DETAILS
SCALE: NO SCALE	FILE: LAT-6

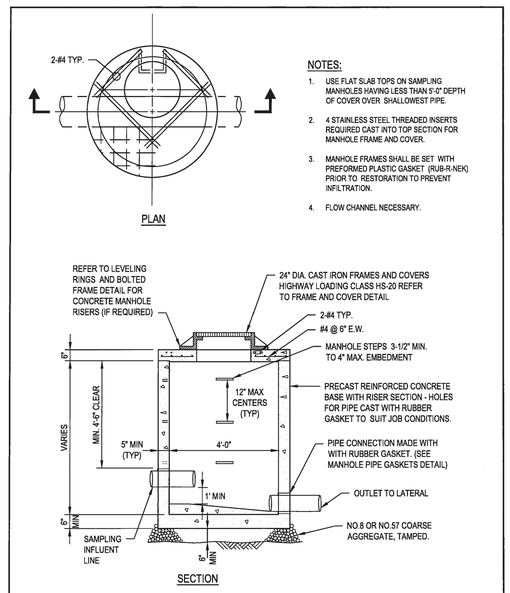

NOTES:
1. USE FLAT SLAB TOPS ON SAMPLING MANHOLES HAVING LESS THAN 5'-0" DEPTH OF COVER OVER SHALLOWEST PIPE.
2. 4 STAINLESS STEEL THREADED INSERTS REQUIRED CAST INTO TOP SECTION FOR MANHOLE FRAME AND COVER.
3. MANHOLE FRAMES SHALL BE SET WITH PREFORMED PLASTIC GASKET (RUB-R-NEK) PRIOR TO RESTORATION TO PREVENT INFILTRATION.
4. FLOW CHANNEL NECESSARY.

PRECAST CONCRETE SAMPLING MANHOLE

DATE	REVISIONS
OCT, 2018	UPDATED STANDARD DETAILS
SCALE: NO SCALE	FILE: G-1

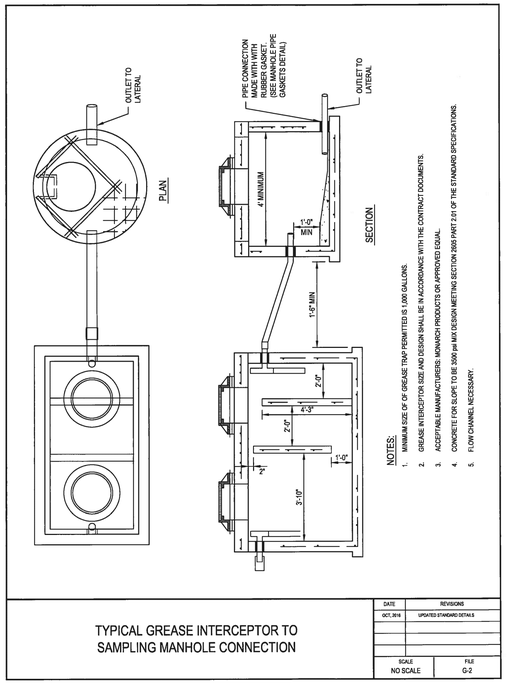

NOTES:
1. MINIMUM SIZE OF OF GREASE TRAP PERMITTED IS 1,000 GALLONS.
2. GREASE INTERCEPTOR SIZE AND DESIGN SHALL BE IN ACCORDANCE WITH THE CONTRACT DOCUMENTS.
3. ACCEPTABLE MANUFACTURERS: MONARCH PRODUCTS OR APPROVED EQUAL.
4. CONCRETE FOR SLOPE TO BE 3000 psi MIX DESIGN MEETING SECTION 3089 PART 2.01 OF THE STANDARD SPECIFICATIONS.
5. FLOW CHANNEL NECESSARY.

TYPICAL GREASE INTERCEPTOR TO SAMPLING MANHOLE CONNECTION

DATE	REVISIONS
OCT, 2018	UPDATED STANDARD DETAILS
SCALE: NO SCALE	FILE: G-2

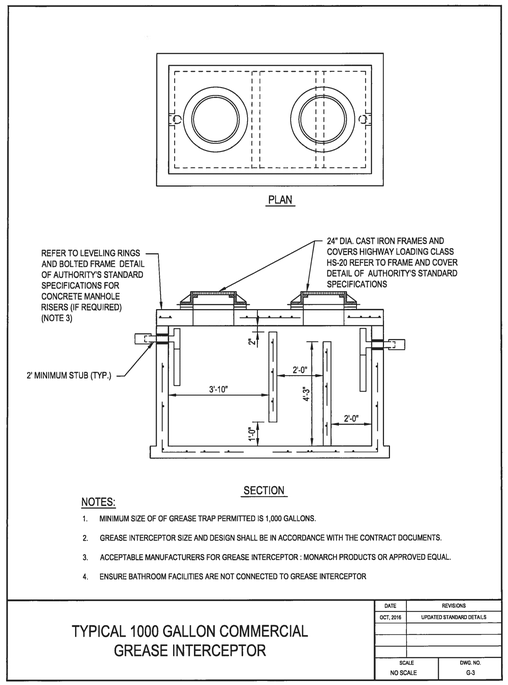

NOTES:
1. MINIMUM SIZE OF OF GREASE TRAP PERMITTED IS 1,000 GALLONS.
2. GREASE INTERCEPTOR SIZE AND DESIGN SHALL BE IN ACCORDANCE WITH THE CONTRACT DOCUMENTS.
3. ACCEPTABLE MANUFACTURERS FOR GREASE INTERCEPTOR : MONARCH PRODUCTS OR APPROVED EQUAL.
4. ENSURE BATHROOM FACILITIES ARE NOT CONNECTED TO GREASE INTERCEPTOR

TYPICAL 1000 GALLON COMMERCIAL GREASE INTERCEPTOR

DATE	REVISIONS
OCT, 2018	UPDATED STANDARD DETAILS
SCALE: NO SCALE	DWG. NO.: G-3

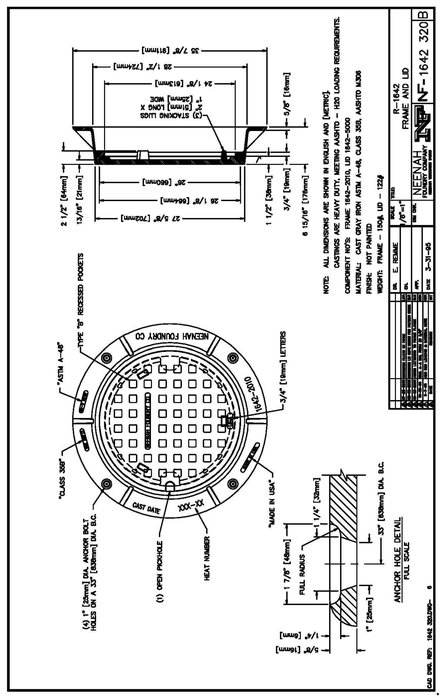

TYPICAL GREASE INTERCEPTOR DETAILS

DATE	REVISIONS
OCT, 2018	UPDATED STANDARD DETAILS
SCALE: NO SCALE	DWG. NO.: G-4

NO	REVISION	DATE
1	TWP./CTY COMMENTS	05/13/20
2	----	----
3	----	----
4	----	----

COPYRIGHT @ 2020 BY R.J. FISHER & ASSOCIATES, INC.

R. J. FISHER & ASSOCIATES, INC.
SITE PLANNING ▫ CIVIL ENGINEERING ▫ LAND SURVEYS
1546 BRIDGE STREET, NEW CUMBERLAND, PA. 17070
PHONE: (717) 774-7534 FAX: (717) 774-7190
WWW.RJFISHERENGINEERING.COM

SANITARY SEWER DETAILS
FOR
LOT 3, BLUE RIDGE VILLAGE
LOCATED IN
LOWER PAXTON TOWNSHIP, DAUPHIN COUNTY, PA

DRAWING ID: 220014-DET
DATE: 04/08/20
SHEET: 14 OF 17

I:\PROJECTS\2020\220014\CAD\LDP-PAR\220014-DET.DWG
REF: I:\...\220014\CAD\DET\220014-xDTL.dwg
14-DET

EROSION CONTROL PLAN

GENERAL NOTES

1. The site contractor and their designees shall familiarize themselves with this Erosion Control Plan. The site contractor shall be responsible for implementation of this Erosion Control Plan.
2. The site contractor shall not disturb more area than is necessary for the task to be done, so that potential for erosion is minimized.
3. The site contractor shall ensure that earth disturbance activities are planned and implemented to the extent practicable in accordance with the following:
   a. Minimize the extent and duration of the earth disturbance.
   b. Maximize protection of existing drainage features and vegetation.
   c. Minimize soil compaction.
   d. Utilize other measures or controls that prevent or minimize the generation of increased stormwater runoff.
4. Erosion and sedimentation controls must be constructed, stabilized, and functional before site disturbance within the tributary areas to the controls.
5. A copy of the approved Erosion and Sediment Control Plan / Drawings (stamped, signed and dated by the reviewing agency) must be available at the project site at all times.
6. Clearing, grubbing, and topsoil stripping shall be limited to those areas described in each stage of the construction sequence. General site clearing, grubbing and topsoil stripping may not commence in any stage or phase of the project until the E & S BMPs specified by the Construction Sequence for that stage or phase have been installed and are functioning as described in this document.
7. At no time shall construction vehicles be allowed to enter areas outside the limit of disturbance boundaries shown on the plan maps. These areas must be clearly marked and fenced off before clearing and grubbing operation begin.
8. Topsoil stockpile heights shall not exceed 35 feet. Stockpile side slopes must be 2:1 or flatter.
9. Solids, trash and other pollutants shall be disposed in accordance with federal and state regulations in order to prevent any pollutant in such materials from adversely affecting the environment. All building materials and wastes must be removed from the site and recycled or disposed in accordance with the Department of Environmental Protection's Solid Waste Management regulations at 25 Pa. Code 260, 260.1 et seq., 271.1, and 287.1 et seq. No building materials or wastes or unused building materials shall be burned, buried, dumped, or discharged at the site.
10. All off-site waste and borrow areas must have an E & S Plan approved by the Conservation District or DEP, and fully implemented prior to being activated.
11. The contractor will be responsible for the removal of any excess material and make sure the site(s) receiving the excess has an approved and fully implemented erosion and sediment control plan that meets the conditions of Chapter 102 and/or other State or Federal regulations.
12. The contractor is responsible for ensuring that any material brought onto the site is Clean Fill. Form FP-001 must be retained by the property owner for any fill material affected by a spill or release of a regulated substance but qualifying as Clean Fill due to analytical testing.
13. Areas which are to be topsoiled shall be scarified to a minimum depth of 4 inches prior to placement of topsoil. Areas to be vegetated shall have a minimum 4 inches of topsoil in place prior to seeding and mulching. Fill outslopes shall have a minimum of 2 inches of topsoil.
14. All graded areas shall be permanently stabilized immediately upon reaching finished grade. Cut slopes in competent bedrock and rock fills need not be vegetated.
15. Cut and fill slopes shall be capable of resisting failure due to slumping, sliding, or other movements.
16. All E & S BMPs must remain functional as such until all areas tributary to them are permanently stabilized or until they are replaced by another BMP approved by the Conservation District or PA DEP.
17. After final site stabilization has been achieved, temporary E & S BMPs must be removed or converted to permanent post construction stormwater management BMPs. Ares disturbed during removal or conversion of the BMPs must be stabilized immediately. In order to ensure rapid revegetation of disturbed areas, such removal / conversions should be done only during the germinating season.
18. Failure to correctly install E & S BMPs, failure to prevent sediment-laden runoff from leaving the construction site, or failure to take immediate corrective action to resolve failure of E & S BMPs may result in administrative, civil, and/or criminal penalties being instituted by the Pennsylvania Department of Environmental Protection as defined in Section 602 of the Pennsylvania Clean Streams law. The Clean Streams law provides for up to $10,000 per day in civil penalties, up to $10,000 in summary criminal penalties, and up to $25,000 in misdemeanor criminal penalties for each violation.
19. Only limited disturbance will be permitted to initially access and acquire borrow to construct control facilities, before general site alteration begins.
20. If fuel or other dangerous chemicals are stored on site, then a Preparedness, Prevention and Contingency (PPC) Plan must be developed and kept on site.
21. Underground utilities cutting through any active channel shall be immediately backfilled and the channel restored to its original cross-section and protective lining. Any base flow within the channel shall be conveyed past the work in the manner described in this plan until such restoration is complete.
22. All channels must be kept free of obstructions such as fill ground, fallen leaves & woody debris, accumulated sediment, and construction materials/wastes. Channels should be kept mowed and/or free of all weedy, brushy or woody growth. Any underground utilities running across/through the channel(s) shall be immediately backfilled and the channel(s) repaired and stabilized per the channel cross-section detail.
23. Vegetated channels shall be constructed free of rocks, tree roots, stumps or other projections that will impede normal channel flow and/or prevent good lining to soil contact. The channel shall be initially over-excavated to allow for the placement of topsoil.
24. Sediment basins/traps shall be kept free of all trash, concrete wash water and other debris that pose the potential for clogging the basin/trap outlet structures and/or pose the potential for pollution to waters of the Commonwealth.
25. All building materials and wastes shall be removed from the site and recycled or disposed of in accordance with the Department's Solid Waste Management Regulations at 25 Pa. Code 260.1 et seq., 271.1., and 287.1 et seq. No building materials or wastes or unused building materials shall be burned, buried, dumped, or discharged at the site.
26. Fill Materials:
   a. The NPDES Permit covers the "moving, depositing, stockpiling, or storing of soil rock or earth materials." If the site will need to have fill imported from an off site location, the responsibility for performing environmental due diligence and the determination of clean fill will in most cases reside with the Operator. If the site will have excess fill that will need to be exported to an off site location, the responsibility of clean fill determination and the environmental due diligence rests on the applicant. If all cut and fill materials will be used on the site, a clean fill determination is not required by the operator unless there is a belief that a spill or release of a regulated substance occurred on site. The contractor is responsible for ensuring that any material brought onto the site is Clean Fill. Form FP-001 must be retained by the property owner for any fill material affected by a spill or release of a regulated substance but qualifying as Clean Fill due to analytical testing.
   b. Applicants and/or operators must use environmental due diligence to ensure that the fill material associated with this project qualifies as Clean Fill. Definitions of Clean Fill and Environmental Due Diligence are provided below. All fill material must be used in accordance with the Department's policy "Management of Fill", document number 258-2182-773. A copy of this policy is available online at www.depweb.state.pa.us. Under the heading Quick Access on the left side of the screen, click on "Forms and Publications." On the left side of the screen click on "Technical Guidance Documents- Final." Then type the document number 258-2182-773 into the search window and conduct the search. Click on "Management of Fill."
   c. Clean Fill is defined as: Uncontaminated, non-water soluble, non-decomposable, inert, solid material. The term includes soil, rock, stone, dredged material, used asphalt, and brick, block or concrete from construction and demolition activities that is separate from other waste and is recognizable as such. The term does not include materials placed in or on the waters of the Commonwealth unless otherwise authorized. (The term "used asphalt" does not include milled asphalt or asphalt that has been processed for re-use.)
   d. Clean Fill affected by a spill or release of a regulated substance: Fill materials affected by a spill or release of a regulated substance still qualifies as clean fill provided the testing reveals that the fill material contains concentrations of regulated substances that are below the residential limits in Tables FP-1a and FP-1b found in the Department's policy "Management of Fill."
   e. Environmental due diligence: Investigative techniques, including, but not limited to, visual property inspections, electronic data base searches, review of property ownership, review of property use history, Sanborn maps, environmental questionnaires, transaction screens, analytical testing, environmental assessments or audits. Analytical testing is not a required part of due diligence unless visual inspection and/or review of the past land use of the property indicates that the fill may have been subjected to a spill or release of regulated substance. If the fill may have been affected by a spill or release of a regulated substance, it must be tested to determine if it qualifies as clean fill. Testing should be performed in accordance with Appendix A of the Department's policy "Management of Fill."
   f. Fill material that does not qualify as clean fill is regulated fill. Regulated fill is waste and must be managed in accordance with the Department's municipal or residual waste regulations based on 25 Pa. Code Chapters 287 Residual Waste Management or 271 Municipal Waste Management, whichever is applicable.
27. The potential for thermal impacts exists in the temporary condition as the existing vegetation on the site is disturbed, and un-shaded water will sit in the sediment traps. The thermal impacts will be minimized by infiltrating a portion of the runoff and temporary seeding disturbed areas as soon as possible.Trees in and around pavement areas will shade pavement and cool runoff.

SOIL LIMITATIONS & RESOLUTIONS

The soils on this site tend to be easily erodible, and may be susceptible to piping. A solution to this limitation is to grade the site at acceptable slopes (2:1 cut, 3:1 fill), and to stabilize the slopes as soon as they've been graded. The soils on this site are also corrosive to concrete, which the use of plastic pipes will help to alleviate. As are most soils in PA, the soils on this site can lead to cut banks that may cave. Proper stabilization will be utilized when digging pipe trenches and foundations. The soils on this site also have issues with slow percolation. Test pits and infiltration tests were performed in the area of the basins and underground infiltration beds to ensure that these limitations were analyzed for this site. These tests also allowed us to analyze the amount of topsoil present, which may be a limitation on the site.

SITE PRESERVATION ANALYSIS

There are no stream channels located on this site to preserve, maintain or protect. Due to the nature of the development, which includes a large building and a large amount of parking surfaces, it was not possible to minimize the impervious areas on the site. There are no significant drainage features and vegetation to protect on this site. Most of the site area will have to be cleared and graded in order to construct the proposed improvements. The soil will experience some compaction in all of the areas where grading will occur, however compaction will be kept to a minimum in the areas of the basins and underground infiltration beds. Amended soils will be added to the bottoms of the basins to promote infiltration. A number of BMPs including the stormwater basins and underground infiltration beds have been utilized to minimize changes in stormwater runoff. The increase in the stormwater runoff volume in the 2-year storm will be infiltrated through the bottoms of the basins and underground infiltration beds.

STABILIZATION SPECIFICATIONS

1. Upon temporary cessation of an earth disturbance activity or any stage or phase of an activity where a cessation of earth disturbance activities will exceed 4 days, the site shall be immediately seeded, mulched, or otherwise protected from accelerated erosion and sedimentation pending future earth disturbance activities.

2. Permanent stabilization is defined as a minimum uniform 70% perennial vegetative cover or other permanent non-vegetative cover with a density sufficient to resist accelerated surface erosion and subsurface characteristics sufficient to resist sliding and other movements.

3. Topsoil required for the establishment of vegetation shall be stockpiled at the location(s) shown on the plan drawings in the amount necessary to complete the finish grading of all exposed areas that are to be stabilized by vegetation. Each stockpile shall be protected in the manner shown on the plan drawings. Topsoil stockpile heights shall not exceed 35 feet. Stockpile side slopes must be 2:1 or flatter.

4. Areas which are to be topsoiled shall be scarified to a minimum depth of 3 to 5 inches (6 to 12 inches on compacted soils) prior to placement of topsoil. Areas to be vegetated shall have a minimum 4 inches of topsoil in place prior to seeding and mulching. Fill outslopes shall have a minimum of 2 inches of topsoil.

5. Topsoil should not be placed while the topsoil or subsoil is in a frozen or muddy condition, when the subsoil is excessively wet, or in a condition that may otherwise be detrimental to proper grading and seedbed preparation. Compacted soils should be scarified 6 to 12 inches along contour whenever possible prior to seeding.

6. An erosion control blanket will be installed on all disturbed slopes 3:1 or steeper, all areas of concentrated flows, and disturbed areas within 50' of a surface water.

TEMPORARY SEEDING SCHEDULE

The contractor shall immediately temporarily stabilize any rough graded area, topsoil stockpile or unused excavated fill material that will be left idle for less than 1 year. The grass will provide interim protection against the impact of precipitation, running water and wind. Permanently seed any area that will be idle for more than 1 year.

Temporary seeding schedule is as follows:

Species: Annual Rye grass
% Live Seed: 88.2%
Application rate: 10 lbs./1,000 sq. yds.
Fertilizer type: general purpose granular, 10-20-20
Fertilizer application rate: 100 lbs./1,000 sq. yds. (Fertilizers should be reduced or eliminated based on soil test recommendations from approved lab.
Powdered Liming rate: per soil test; minimum of 410 lbs/1000 yds.
Strawbale mulch rate: 1,200 lbs/1,000 sq. yds.
Seeding dates: March 15 – October 15
Mulch anchoring: Asphalt, either emulsified or cut-back, containing no solvents or other diluting agents toxic to plant or animal life, uniformly applied at the rate of 31 gallons per 1,000 square yards. Synthetic binders (chemical binders) may be used per manufacturer's recommendation provided they are non-toxic to plant and animal species.

When seeding is not possible due to the time of year or other limitations, disturbed area shall be mulched with strawbales at the rate above. An erosion control blanket must be installed on all disturbed slopes steeper than 3:1, and all areas with concentrated flows. Matting can be North American Green 'S75' or approved equal.

PERMANENT SEEDING SCHEDULE--

All disturbed soil not to be covered with impervious surfaces, riprap or landscaping mulch shall be permanently seeded to provide protection against the impact of precipitation, running water and wind. Permanent seeding schedule for the general project area is as follows:

Species: 50% Kentucky bluegrass
30% Pennlawn Creeping Red Fescue
20% Norlea Perennial ryegrass
% Pure live seed: 88.2%, 83.3%, 78.4%, Respectively
Application rate: 21 lbs./1,000 sq. yds.
Fertilizer type: general purpose granular, 10-20-20
Fertilizer application rate: 210 lbs./1,000 sq. yds., see temporary seed note
Powdered Liming rate: per soil test; minimum of 2480 lbs/1000 yds
Seeding dates: between March 15 – June 1, August 1 – October 15
Strawbale mulching rate: 1200 lbs/1000 sq. yds.
Mulch anchoring: Asphalt, either emulsified or cut-back, containing no solvents or other diluting agents toxic to plant or animal life, uniformly applied at the rate of 31 gallons per 1,000 square yards. Synthetic binders (chemical binders) may be used per manufacturer's recommendation provided they are non-toxic to plant and animal species.

An erosion control blanket must be installed on all disturbed slopes steeper than 3:1, and all areas with concentrated flows. Matting can be North American Green "S75" or approved equivalent.

A minimum of 6" of topsoil shall be placed prior to seeding.

MAINTENANCE PLAN SCHEDULE

1. Until the site is stabilized, all erosion and sediment control BMPs must be maintained properly. Responsibility for implementing and maintaining erosion and sedimentation control measures shall be designated to a minimum of one individual who will be present at the project site each working day. Maintenance must include inspections of all erosion and sediment control BMPs after each runoff event and on a weekly basis, to ensure that they are in place, stable, and functioning properly. All preventative and remedial maintenance work, including clean out, repair, replacement, re-grading, reseeding, re-mulching, and re-netting must be performed immediately, to restore the control measure to the original design. If erosion and sediment control BMPs fail to perform as expected, replacement BMPs, or modifications of those installed, will be required.

2. A log showing dates that E & S BMPs were inspected as well as any deficiencies found and the date they were corrected shall be maintained on the site and be made available to regulatory agency officials at the time of inspection.

3. Any sediment removed from BMPs during construction shall be returned to upland areas within the project area, and incorporated into the site grading, or in the manner described on the plan drawings.

4. See the construction details and seeding specifications for maintenance procedures for the various control measures.

5. Mud must be removed from vehicle tires before they exit the site. Sediment tracked onto any public roadway or sidewalk shall be returned to the construction site by the end of each work day and disposed in the manner described in this plan. In no case shall the sediment be washed, shoveled, or swept into any roadside ditch, storm sewer or surface water.

STAGING OF EARTH MOVING ACTIVITIES

1. A licensed professional or a designee shall be present on site during construction of any critical stages of implementation of the approved PCSM plan.
2. At least 3 days before starting any earth disturbance activities, all contractors involved in those activities shall notify the Pennsylvania One Call system Incorporated at 1-800-242-1776 for the location of existing underground utilities.
3. All earth disturbance activities shall proceed in accordance with the following specific sequencing. Each stage shall be completed and immediately stabilized before any following stage is initiated. Clearing, grubbing and topsoil stripping shall be limited only to those areas described in each stage. Any deviation from the following sequence must be approved in writing from the County Conservation District.
4. Immediately upon discovering unforeseen circumstances posing the potential for accelerated erosion and/or sediment pollution, the operator shall implement appropriate best management practices to eliminate the potential for accelerated erosion and/or sediment pollution.
5. At least 7 days before starting any earth disturbance activities, the owner and/or operator shall invite all contractors involved in those activities, the landowner, all appropriate municipal officials, and a representative of the County Conservation District to an on-site pre-construction meeting.
6. Immediately after earth disturbance activities cease, the operator shall stabilize the disturbed areas. During non-germinating periods, mulch must be applied at the specified rates. Disturbed areas which are not at finished grade and which will be re-disturbed within 1 year must be stabilized in accordance with the temporary seeding vegetative stabilization specifications. Disturbed areas which are not at final grade or which will not be re-disturbed within 1 year must be stabilized in accordance with the permanent seeding vegetative stabilization specifications.
7. All pumping of sediment laden water shall be through a sediment control BMP, such as a pumped water filter bag or equivalent sediment removal facility, over undisturbed vegetated areas.

SPECIFIC STAGING OF MAJOR EARTH MOVING ACTIVITIES AND PCSM BMP SEQUENCE

1. No earth disturbance should be started until the E&S BMP's treating the disturbed area are installed and functioning.
2. Clearly mark the limits of disturbance.
3. Install the rock construction entrance. The rock construction entrance shall be continually maintained to the specified dimensions. A stockpile of AASHTO #1 coarse aggregate shall be on the site for this purpose. At the end of each workday, any sediment deposited on paved roadways shall be removed and returned to the construction site.
4. Install Sediment Barriers at the locations shown on the E&S Plan. Disturbance shall be restricted to that which is only necessary to access and install the designated sediment barriers.
5. Install Inlet Protection at existing Inlets where indicated.
6. Strip the topsoil within the remaining areas that will be graded. Clear and grub as necessary. Field mark the topsoil stockpile locations. Topsoil stockpiles shall be stabilized utilizing the temporary seeding schedule and shall have sediment barriers located downstream to capture any sediment laden runoff. Stockpiles shall not exceed 35' in height and side slopes must be 2:1 or flatter.
7. Complete the mass grading. Minimize soil compaction within the undisturbed areas. Stabilize soil immediately and install temporary seeding as soon as possible. Permanent slopes of 3:1 or greater require temporary N.A.G. S75 matting or equivalent, as shown on the E&S plan.
8. Install Storm Sewers & Inlets. Filter inlet bags or standard inlet protection must be installed on units as indiacted as soon as the inlets are installed to ensure that only clean water is entering the system.
9. Install curbing where indicated.
10. Install parking lot and access drive binder course.
11. Begin building construction.
12. Construction entrance may be removed with approval from Dauphin County Conservation District.
13. Install landscaping per landscape plan. Permanently seed and mulch as required.
14. Finish pavement with wearing course.

Conversion to Final PCSM Condition

1. Temporary control measures can only be removed when the watershed draining to the measure is permanently stabilized and removal is authorized by the County Conservation District. Permanently stabilized is defined as a minimum uniform 70% perennial vegetative cover or other permanent non-vegetative cover with a density capable to resist accelerated surface erosion, and subsurface characteristics sufficient to resist sliding and other movements. The location of the control measure must be immediately permanently stabilized upon its removal. All areas to be permanently seeded shall have a minimum depth of 6" of topsoil before seeding.

2. Upon completion of all earth disturbance activities and permanent stabilization of all disturbed areas, the owner and/or operators shall contact the County Conservation District for an inspection prior to the removal/conversion of the E&S BMP's.

3. Any areas disturbed during the removal of the temporary BMPs shall be immediately repaired and permanently stabilized.

4. Upon approval from the County Conservation District, all sediment deposited within storm sewers shall be removed prior to converting the sediment trap.

5. Upon approval from the County Conservation District, all silt barriers shall be properly removed.

6. Upon completion of all earth disturbance activities, removal of all temporary BMPs, installation of all permanent BMPs and permanent stabilization of all disturbed areas, the owner/operators shall contact the County Conservation District for a final inspection.

Maintenance of Temporary Erosion & Sediment Control Facilities

1. Until the site is stabilized, all erosion and sediment control BMPs must be maintained properly. Responsibility for implementing and maintaining erosion and sedimentation control measures shall be designated to a minimum of one individual who will be present at the project site each working day. Maintenance must include inspections of all erosion and sediment control BMPs after each runoff event and on a weekly basis, to ensure that they are in place, stable, and functioning properly. All preventative and remedial maintenance work, including clean out, repair, replacement, re-grading, reseeding, re-mulching, and re-netting must be performed immediately, to restore the control measure to the original design. If erosion and sediment control BMPs fail to perform as expected, replacement BMPs, or modifications of those installed, will be required.
2. A log showing dates that E & S BMPs were inspected as well as any deficiencies found and the date they were corrected shall be maintained on the site and be made available to regulatory agency officials at the time of inspection.
3. Any sediment removed from BMPs during construction shall be returned to upland areas within the project area, and incorporated into the site grading, or in the manner described on the plan drawings.
4. See the construction details and seeding specifications for maintenance procedures for the various control measures.
5. Mud must be removed from vehicle tires before they exit the site. Sediment tracked onto any public roadway or sidewalk shall be returned to the construction site by the end of each work day and disposed in a manner described in this plan. In no case shall the sediment be washed, shoveled, or swept into any roadside ditch, storm sewer, or surface water.

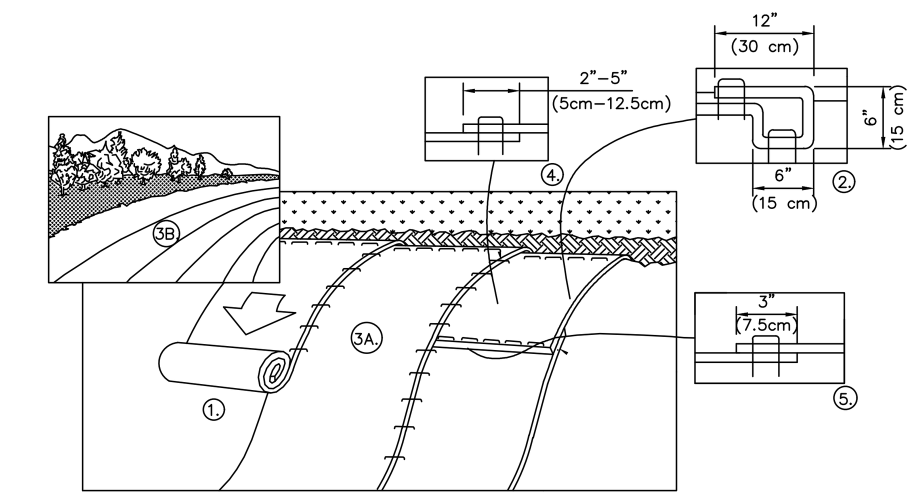

NOTE: EROSION CONTROL MATTING SHALL BE NORTH AMERICAN GREEN S75, OR APPROVED EQUAL.

1. PREPARE SOIL BEFORE INSTALLING BLANKETS, INCLUDING ANY NECESSARY APPLICATION OF LIME, FERTILIZER, AND SEED. NOTE: WHEN USING CELL-O-SEED DO NOT SEED PREPARED AREA. CELL-O-SEED MUST BE INSTALLED WITH PAPER SIDE DOWN.
2. BEGIN AT THE TOP OF THE SLOPE BY ANCHORING THE BLANKET IN A 6" (15cm) DEEP X 6" (15cm) WIDE TRENCH WITH APPROXIMATELY 12" (30cm) OF BLANKET EXTENDED BEYOND THE UP-SLOPE PORTION OF THE TRENCH. ANCHOR THE BLANKET WITH A ROW OF STAPLES/STAKES APPROXIMATELY 12" (30cm) APART IN THE BOTTOM OF THE TRENCH. BACKFILL AND COMPACT THE TRENCH AFTER STAPLING. APPLY SEED TO COMPACTED SOIL AND FOLD REMAINING 12" (30cm) PORTION OF BLANKET BACK OVER SEED AND COMPACTED SOIL. SECURE BLANKET OVER COMPACTED SOIL WITH A ROW OF STAPLES/STAKES SPACED APPROXIMATELY 12" (30cm) APART ACROSS THE WIDTH OF THE BLANKET.
3. ROLL THE BLANKETS (A.) DOWN OR (B.) HORIZONTALLY ACROSS THE SLOPE. BLANKETS WILL UNROLL WITH APPROPRIATE SIDE AGAINST THE SOIL SURFACE. ALL BLANKETS MUST BE SECURELY FASTENED TO SOIL SURFACE BY PLACING STAPLES/STAKES IN APPROPRIATE LOCATIONS AS SHOWN IN THE STAPLE PATTERN GUIDE. WHEN USING OPTIONAL DOT SYSTEM , STAPLES/STAKES SHOULD BE PLACED THROUGH EACH OF THE COLORED DOTS CORRESPONDING TO THE APPROPRIATE STAPLE PATTERN.
4. THE EDGES OF PARALLEL BLANKETS MUST BE STAPLED WITH APPROXIMATELY 2"-5" (5cm-12.5cm) OVERLAP DEPENDING ON BLANKET TYPE. TO ENSURE PROPER SEAM ALIGNMENT, PLACE THE EDGE OF THE OVERLAPPING BLANKET (BLANKET BEING INSTALLED ON TOP) EVEN WITH THE COLORED SEAM STITCH ON THE PREVIOUSLY INSTALLED BLANKET.
5. CONSECUTIVE BLANKETS SPLICED DOWN THE SLOPE MUST BE PLACED END OVER END (SHINGLE STYLE) WITH AN APPROXIMATE 3" (7.5cm) OVERLAP. STAPLE THROUGH OVERLAPPED AREA, APPROXIMATELY 12" (30cm) APART ACROSS ENTIRE BLANKET WIDTH.

NOTE:
*IN LOOSE SOIL CONDITIONS, THE USE OF STAPLE OR STAKE LENGTHS GREATER THAN 6" (15cm) MAY BE NECESSARY TO PROPERLY SECURE THE BLANKETS.

EROSION CONTROL MATTING ON SLOPE
N.T.S.

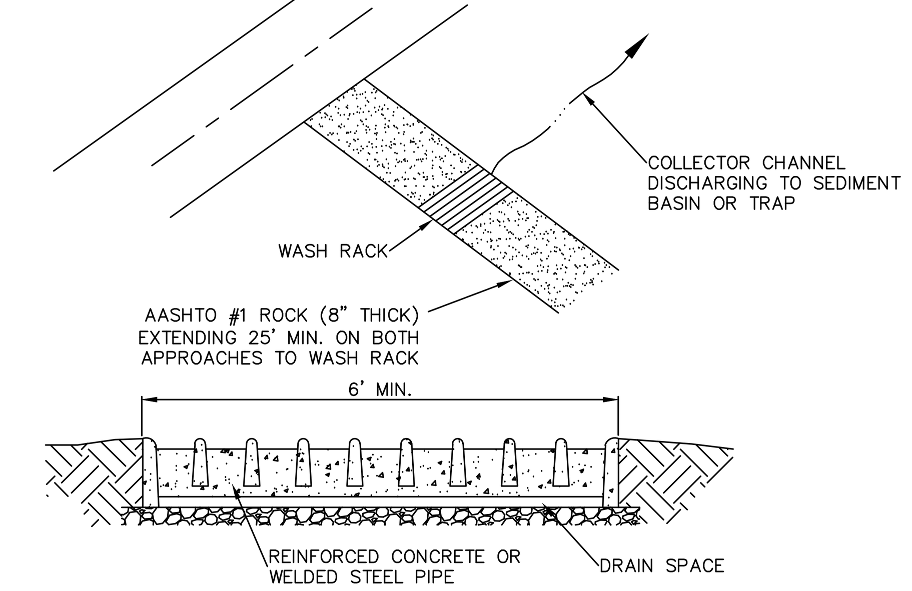

NOTES:

WASH RACK SHALL BE 20 FEET (MIN.) WIDE OR TOTAL WIDTH OF ACCESS.

WASH RACK SHALL BE DESIGNED AND CONSTRUCTED TO ACCOMMODATE ANTICIPATED CONSTRUCTION VEHICULAR TRAFFIC.

A WATER SUPPLY SHALL BE MADE AVAILABLE TO WASH THE WHEELS OF ALL VEHICLES EXITING THE SITE.

MAINTENANCE: ROCK CONSTRUCTION ENTRANCE THICKNESS SHALL BE CONSTANTLY MAINTAINED TO THE SPECIFIED DIMENSIONS BY ADDING ROCK. A STOCKPILE OF ROCK MATERIAL SHALL BE MAINTAINED ON SITE FOR THIS PURPOSE. DRAIN SPACE UNDER WASH RACK SHALL BE KEPT OPEN AT ALL TIMES. DAMAGE TO THE WASH RACK SHALL BE REPAIRED PRIOR TO FURTHER USE OF THE RACK. ALL SEDIMENT DEPOSITED ON ROADWAYS SHALL BE REMOVED AND RETURNED TO THE CONSTRUCTION SITE IMMEDIATELY. WASHING THE ROADWAY OR SWEEPING THE DEPOSITS INTO ROADWAY DITCHES, SEWERS, CULVERTS, OR OTHER DRAINAGE COURSES IS NOT ACCEPTABLE.

STANDARD CONSTRUCTION DETAIL #3-2
ROCK CONSTRUCTION ACCESS WITH WASH RACK
NOT TO SCALE

NO.	REVISION	DATE
1	TWP/CTY COMMENTS	05/13/20
2	----	----
3	----	----
4	----	----

COPYRIGHT @ 2020 BY R.J. FISHER & ASSOCIATES, INC.

R. J. FISHER & ASSOCIATES, INC.
SITE PLANNING ▫ CIVIL ENGINEERING ▫ LAND SURVEYS
1546 BRIDGE STREET, NEW CUMBERLAND, PA. 17070
PHONE: (717) 774-7534 FAX: (717) 774-7190
WWW.RJFISHERENGINEERING.COM

FISHER & Associates, Inc.

EROSION & SEDIMENT POLLUTION CONTROL DETAILS
FOR
LOT 3, BLUE RIDGE VILLAGE
LOCATED IN
LOWER PAXTON TOWNSHIP, DAUPHIN COUNTY, PA

DRAWING ID: 220014-DET

DATE: 04/08/20

SHEET: 15 OF 17

J:\PROJECTS\2020\220014\CAD\LDP-SUB\220014-DET.DWG
XREF: ..\..\..\220014\CAD\XREF\220014-xrDTL.dwg
15-DET

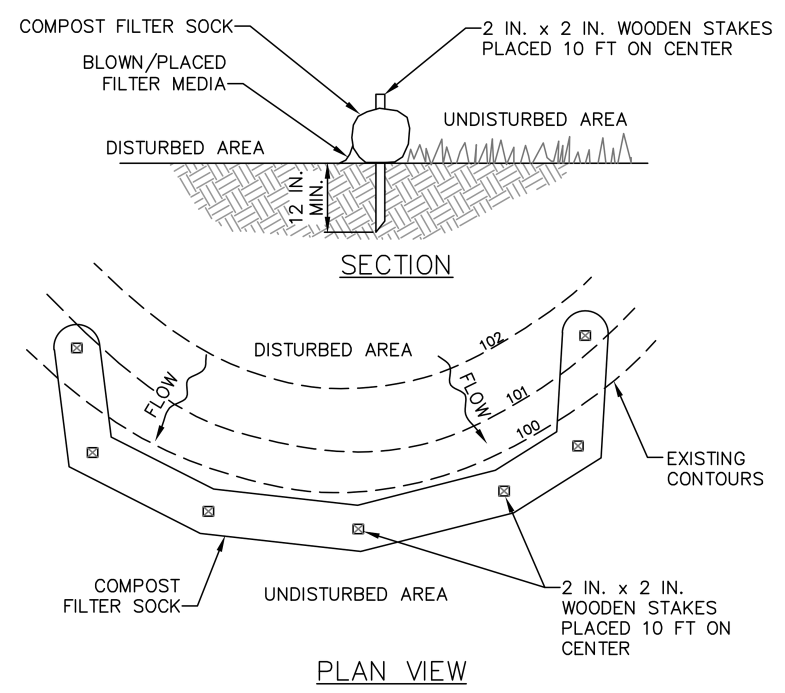

COMPOST FILTER SOCK

NOT TO SCALE

COMPOST SOCK FABRIC MINIMUM SPECIFICATIONS					
Material Type	3 mil HDPE	5 mil HDPE	5 mil HDPE	Multi-Filament Polypropylene (MFPP)	Heavy Duty Multi-Filament Polypropylene (HDMFPP)
Material Characteristics	Photo-degradable	Photo-degradable	Bio-degradable	Photo-degradable	Photo-degradable
Sock Diameters	12" 18"	12" 18" 24" 32"	12" 18" 24" 32"	12" 18" 24" 32"	12" 18" 24" 32"
Mesh Opening	3/8"	3/8"	3/8"	3/8"	1/8"
Tensile Strength		26 psi	26 psi	44 psi	202 psi
Ultraviolet Stability % Original Strength (ASTM G-155)	23% at 1000 hr.	23% at 1000 hr.		100% at 1000 hr.	100% at 1000 hr.
Minimum Functional Longevity	6 months	9 months	6 months	1 year	2 years
TWO-PLY SYSTEMS					
Inner Containment Netting			HDPE biaxial net		
			Continuously wound		
			Fusion-welded junctures		
			3/4" X 3/4" Max. aperture size		
Outer Filtration Mesh			Composite Polypropylene Fabric (Woven layer and non-woven fleece mechanically fused via needle punch)		
			3/16" Max. aperture size		
Sock fabrics composed of burlap may be used on projects lasting 6 months or less.					

Filtrexx & JMD

COMPOST STANDARDS	
Organic Matter Content	25%-100% (dry weight basis)
Organic Portion	Fibrous and elongated
pH	5.5-8.5
Moisture Content	30%-60%
Particle Size	30%-50% pass through 3/8" sieve
Soluble Salt Concentration	5.0 dS/m (mmhos/cm) Maximum

COMPOST FILTER SOCK TABLE

SOCK NO.	DIA. (IN)	LOCATION	SLOPE PERCENT	SLOPE LENGTH ABOVE BARRIER (FT)
1	12	SOUTH, ABOVE BIT WALK	±3.8%	46
2	18	EAST, ABOVE BASIN #6	±3.5%	57

NOTES:

SOCK FABRIC SHALL MEET STANDARDS OF TABLE 4.1 OF THE PA DEP EROSION CONTROL MANUAL. COMPOST SHALL MEET THE STANDARDS OF TABLE 4.2 OF THE PA DEP EROSION CONTROL MANUAL.

COMPOST FILTER SOCK SHALL BE PLACED AT EXISTING LEVEL GRADE. BOTH ENDS OF THE BARRIER SHALL BE EXTENDED AT LEAST 8 FEET UP SLOPE AT 45 DEGREES TO THE MAIN BARRIER ALIGNMENT. MAXIMUM SLOPE LENGTH ABOVE ANY BARRIER SHALL NOT EXCEED THAT SPECIFIED FOR THE SIZE OF THE SOCK AND THE SLOPE OF ITS TRIBUTARY AREA.

TRAFFIC SHALL NOT BE PERMITTED TO CROSS COMPOST FILTER SOCKS.

ACCUMULATED SEDIMENT SHALL BE REMOVED WHEN IT REACHES 1/2 THE ABOVE GROUND HEIGHT OF THE BARRIER AND DISPOSED IN THE MANNER DESCRIBED ELSEWHERE IN THE PLAN.

COMPOST FILTER SOCKS SHALL BE INSPECTED WEEKLY AND AFTER EACH RUNOFF EVENT. DAMAGED SOCKS SHALL BE REPAIRED ACCORDING TO MANUFACTURER'S SPECIFICATIONS OR REPLACED WITHIN 24 HOURS OF INSPECTION.

BIODEGRADABLE COMPOST FILTER SOCKS SHALL BE REPLACED AFTER 6 MONTHS; PHOTODEGRADABLE SOCKS AFTER 1 YEAR. POLYPROPYLENE SOCKS SHALL BE REPLACED ACCORDING TO MANUFACTURER'S RECOMMENDATIONS.

UPON STABILIZATION OF THE AREA TRIBUTARY TO THE SOCK, STAKES SHALL BE REMOVED. THE SOCK MAY BE LEFT IN PLACE AND VEGETATED OR REMOVED. IN THE LATTER CASE, THE MESH SHALL BE CUT OPEN AND THE MULCH SPREAD AS A SOIL SUPPLEMENT.

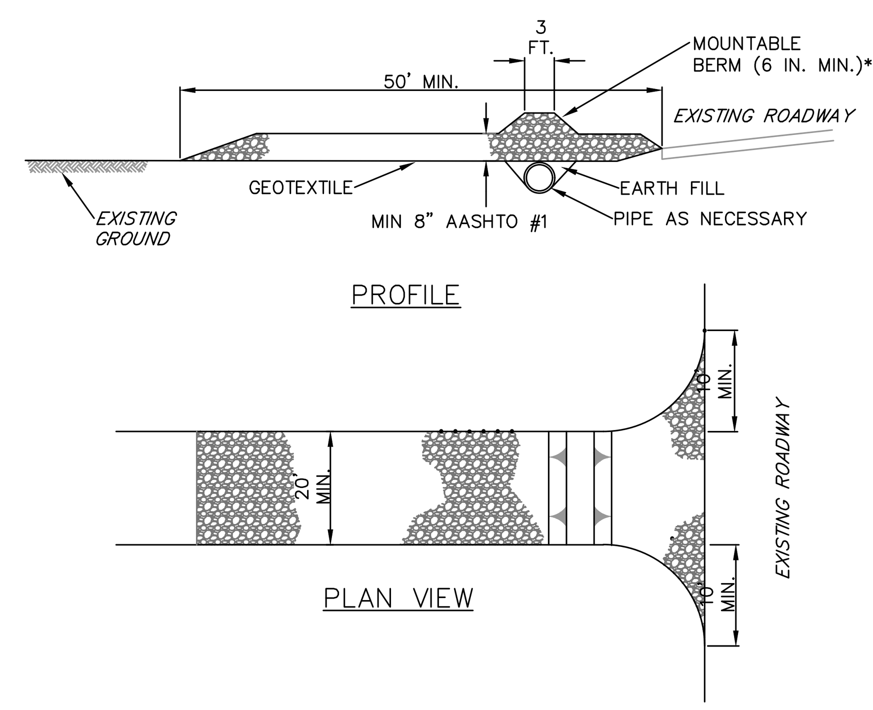

* MOUNTABLE BERM USED TO PROVIDE PROPER COVER FOR PIPE

NOTES:

REMOVE TOPSOIL PRIOR TO INSTALLATION OF ROCK CONSTRUCTION ENTRANCE. EXTEND ROCK OVER FULL WIDTH OF ENTRANCE.

RUNOFF SHALL BE DIVERTED FROM ROADWAY TO A SUITABLE SEDIMENT REMOVAL BMP PRIOR TO ENTERING ROCK CONSTRUCTION ENTRANCE.

MOUNTABLE BERM SHALL BE INSTALLED WHEREVER OPTIONAL CULVERT PIPE IS USED AND PROPER PIPE COVER AS SPECIFIED BY MANUFACTURER IS NOT OTHERWISE PROVIDED. PIPE SHALL BE SIZED APPROPRIATELY FOR SIZE OF DITCH BEING CROSSED.

MAINTENANCE: ROCK CONSTRUCTION ENTRANCE THICKNESS SHALL BE CONSTANTLY MAINTAINED TO THE SPECIFIED DIMENSIONS BY ADDING ROCK. A STOCKPILE SHALL BE MAINTAINED ON SITE FOR THIS PURPOSE. ALL SEDIMENT DEPOSITED ON PAVED ROADWAYS SHALL BE REMOVED AND RETURNED TO THE CONSTRUCTION SITE IMMEDIATELY. IF EXCESSIVE AMOUNTS OF SEDIMENT ARE BEING DEPOSITED ON ROADWAY, EXTEND LENGTH OF ROCK CONSTRUCTION ENTRANCE BY 50 FOOT INCREMENTS UNTIL CONDITION IS ALLEVIATED OR INSTALL WASH RACK. WASHING THE ROADWAY OR SWEEPING THE DEPOSITS INTO ROADWAY DITCHES, SEWERS, CULVERTS, OR OTHER DRAINAGE COURSES IS NOT ACCEPTABLE.

ROCK CONSTRUCTION ENTRANCE

NOT TO SCALE

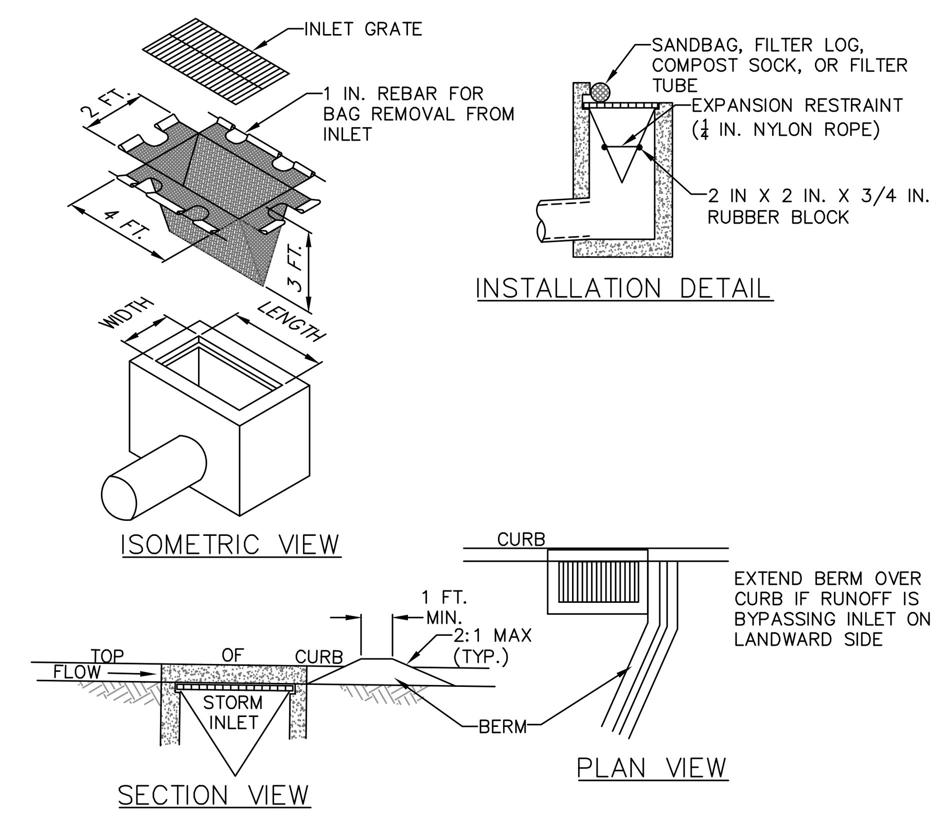

NOTES:

MAXIMUM DRAINAGE AREA = 1/2 ACRE.

INLET PROTECTION SHALL NOT BE REQUIRED FOR INLET TRIBUTARY TO SEDIMENT BASIN OR TRAP. BERMS SHALL BE REQUIRED FOR ALL INSTALLATIONS.

ROLLED EARTHEN BERM SHALL BE MAINTAINED UNTIL ROADWAY IS STONED. ROAD SUBBASE BERM SHALL BE MAINTAINED UNTIL ROADWAY IS PAVED. SIX INCH MINIMUM HEIGHT ASPHALT BERM SHALL BE MAINTAINED UNTIL ROADWAY SURFACE RECEIVES FINAL COAT.
AT A MINIMUM, THE FABRIC SHALL HAVE A MINIMUM GRAB TENSILE STRENGTH OF 120 LBS, A MINIMUM BURST STRENGTH OF 200 PSI, AND A MINIMUM TRAPEZOIDAL TEAR STRENGTH OF 50 LBS. FILTER BAGS SHALL BE CAPABLE OF TRAPPING ALL PARTICLES NOT PASSING A NO. 40 SIEVE.

INLET FILTER BAGS SHALL BE INSPECTED ON A WEEKLY BASIS AND AFTER EACH RUNOFF EVENT. BAGS SHALL BE EMPTIED AND RINSED OR REPLACED WHEN HALF FULL OR WHEN FLOW CAPACITY HAS BEEN REDUCED SO AS TO CAUSE FLOODING OR BYPASSING OF THE INLET. DAMAGED OR CLOGGED BAGS SHALL BE REPLACED. A SUPPLY SHALL BE MAINTAINED ON SITE FOR REPLACEMENT OF BAGS. ALL NEEDED REPAIRS SHALL BE INITIATED IMMEDIATELY AFTER THE INSPECTION. DISPOSE OF ACCUMULATED SEDIMENT AS WELL AS ALL USED BAGS ACCORDING TO THE PLAN NOTES.

DO NOT USE ON MAJOR PAVED ROADWAYS WHERE PONDING MAY CAUSE TRAFFIC HAZARDS.

FILTER BAG INLET PROTECTION - TYPE C INLET

N.T.S.

FIGURE 17.2
Sinkhole Repair with a Pervious Cover

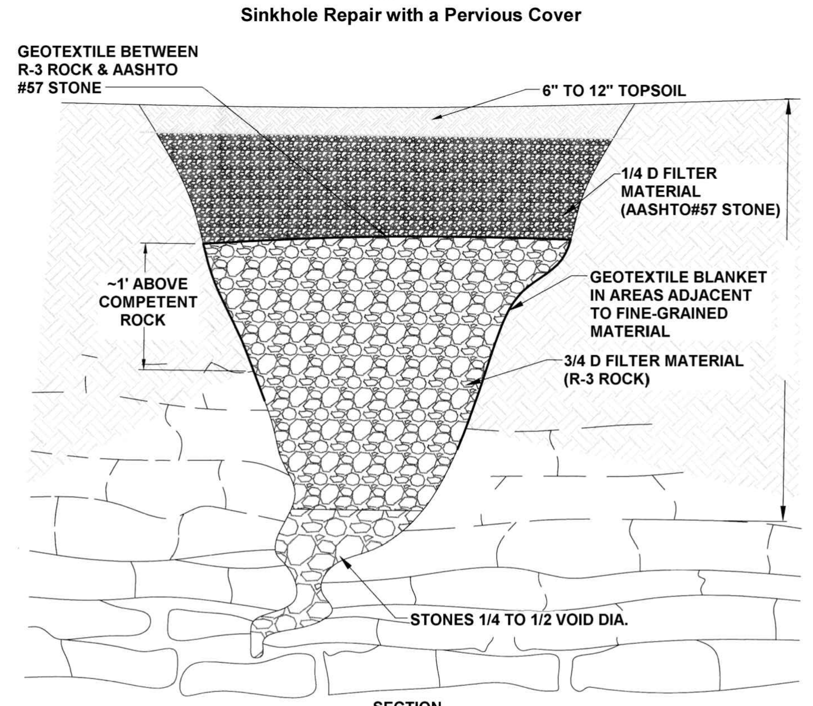

SECTION
NOT TO SCALE

Adapted from USDA NRCS

Loose material shall be excavated from the sinkhole and expose solution void(s) if possible. Enlarge sinkhole if necessary to allow for installation of filter materials. OSHA regulations must be followed at all times during excavation.

Stones used for the "bridge" and filters shall have a moderately hard rock strength and be resistant to abrasion and degradation. Shale and similar soft and/or non-durable rock are not acceptable.

363-2134-008 / March 31, 2012 / Page 329

FIGURE 17.3
Sinkhole Repair with an Impervious Cover

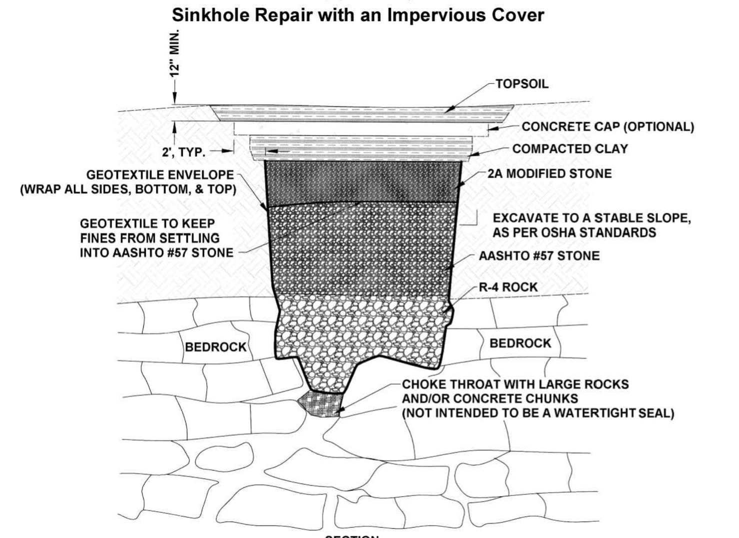

SECTION
NOT TO SCALE

Adapted from USDA NRCS

Loose material shall be excavated from the sinkhole and expose solution void(s) if possible. Enlarge sinkhole if necessary to allow for installation of filter materials. OSHA regulations must be followed at all times during excavation.

Geotextile shall be non-woven with a burst strength between 100 and 200 psi.

Select field stone(s) about 1.5 times larger than solution void(s) to form "bridge." Place rock(s) so no large openings exist along the sides. Stones used for the "bridge" and filters shall have a moderately hard rock strength and be resistant to abrasion and degradation. Shale and similar soft and/or non-durable rock are not acceptable.

Minimum thickness of R-4 rock is 18." AASHTO #57 stone thickness shall be ¼ to ½ that of the R-4 rock. Minimum thickness of 2A modified crushed stone shall be 9". AASHTO #57 stone and 2A modified crushed stone shall be compacted after each placement.

Compacted clay seal shall be a minimum of 12" thick. Clay shall be placed in 6" to 9" lifts and thoroughly compacted.

Concrete cap, which is optional, shall be a minimum of 8" thick. Use 4,000 psi concrete with 6" X 6" - 6 gauge welded wire fabric, or # 3 rebar on 18" O.C. both ways.

Topsoil shall be a minimum of 12" thick. Grade for positive drainage away from sinkhole area.

363-2134-008 / March 31, 2012 / Page 330

FIGURE 17.4
Sinkhole Repair with Soil Cover

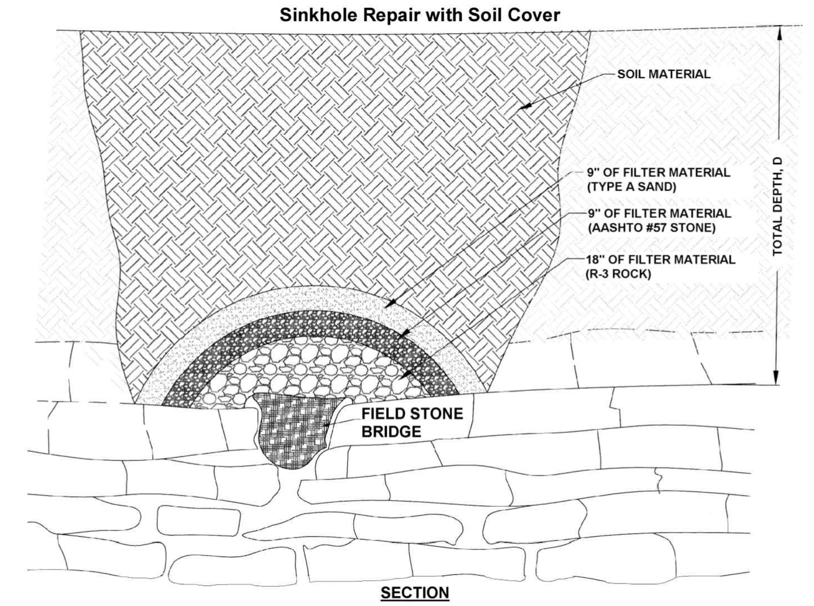

SECTION
NOT TO SCALE

Adapted from USDA NRCS

Loose material shall be excavated from the sinkhole and expose solution void(s) if possible. Enlarge sinkhole if necessary to allow for installation of filter materials. OSHA regulations must be followed at all times during excavation.

Select field stone(s) about 1.5 times larger than solution void(s) to form "bridge." Place rock(s) so no large openings exist along the sides. Stones used for the "bridge" and filters shall have a moderately hard rock strength and be resistant to abrasion and degradation. Shale and similar soft and/or non-durable rock are not acceptable.

Minimum thickness of R-3 rock is 18." AASHTO #57 stone thickness shall be a minimum of 9" thick. Minimum thickness of type A sand shall be 9". NOTE: A non-woven geotextile with a burst strength between 100 and 200 psi may be substituted for the AASHTO#57 stone and type A sand.

Soil shall be mineral soil with at least 12 % fines and overfilled by 5% to allow for settlement. Suitable soil from the excavation may be used. Any available topsoil shall be placed on top surface.

363-2134-008 / March 31, 2012 / Page 331

GENERAL SINKHOLE REPAIR POLICIES:

1. THE AREA OF THE SINKHOLE SHOULD BE EXCAVATED UNTIL THE "THROAT" OF THE SINKHOLE IS DISCOVERED.
2. ALL LOOSE SOIL OR MATERIAL SHOULD BE REMOVED.
3. THE THROAT OF THE SINKHOLE SHOULD BE EVALUATED FOR STABILITY AND/OR THE PRESENCE OF ADDITIONAL FRACTURES.
4. THE SINKHOLE SHOULD THEN BE BACKFILLED USING A GEOTEXTILE FILTER FABRIC FIRST, NO6 GEOTEXTILE CLASS 1 TYPE B. THEN USE R-5 STONE UP TO ABOUT 36" FROM FINISHED GRADE.
5. FOLD THE GEOTEXTILE FILTER FABRIC OVER ITSELF TO CREATE A "BAG."
6. ADD ABOUT 24" OF 2A MODIFIED STONE TO AROUND A FOOT BELOW FINAL GRADE DEPENDING ON WHERE THE SINKHOLE IS AND WHAT MATERIAL IS NEEDED TO FINISH BACKFILLING.
7. CONSULT WITH A GEOTECHNICAL ENGINEER PRIOR TO IMPLEMENTATION OF SINKHOLE REPAIR

SINKHOLE AND SINKHOLE AREA TREATMENT

N.T.S.

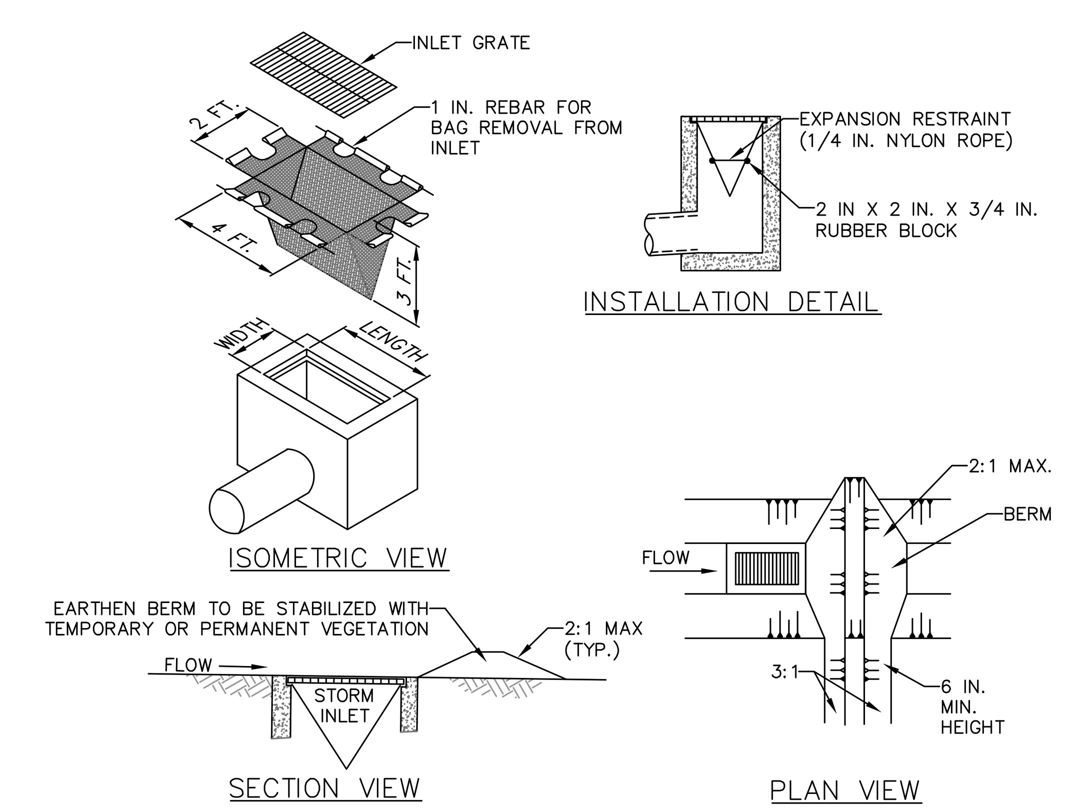

NOTES:

MAXIMUM DRAINAGE AREA = 1/2 ACRE.

INLET PROTECTION SHALL NOT BE REQUIRED FOR INLET TRIBUTARY TO SEDIMENT BASIN OR TRAP. BERMS SHALL BE REQUIRED FOR ALL INSTALLATIONS.

ROLLED EARTHEN BERM IN ROADWAY SHALL BE MAINTAINED UNTIL ROADWAY IS STONED. ROAD SUBBASE BERM ON ROADWAY SHALL BE MAINTAINED UNTIL ROADWAY IS PAVED. EARTHEN BERM IN CHANNEL SHALL BE MAINTAINED UNTIL PERMANENT STABILIZATION IS COMPLETED OR REMAIN PERMANENTLY.

AT A MINIMUM, THE FABRIC SHALL HAVE A MINIMUM GRAB TENSILE STRENGTH OF 120 LBS., A MINIMUM BURST STRENGTH OF 200 PSI, AND A MINIMUM TRAPEZOIDAL TEAR STRENGTH OF 50 LBS. FILTER BAGS SHALL BE CAPABLE OF TRAPPING ALL PARTICLES NOT PASSING A NO. 40 SIEVE.

INLET FILTER BAGS SHALL BE INSPECTED ON A WEEKLY BASIS AND AFTER EACH RUNOFF EVENT. BAGS SHALL BE EMPTIED AND RINSED OR REPLACED WHEN HALF FULL OR WHEN FLOW CAPACITY HAS BEEN REDUCED SO AS TO CAUSE FLOODING OR BYPASSING OF THE INLET. DAMAGED OR CLOGGED BAGS SHALL BE REPLACED. A SUPPLY SHALL BE MAINTAINED ON SITE FOR REPLACEMENT OF BAGS. ALL NEEDED REPAIRS SHALL BE INITIATED IMMEDIATELY AFTER THE INSPECTION. DISPOSE ACCUMULATED SEDIMENT AS WELL AS ALL USED BAGS ACCORDING TO THE PLAN NOTES.

DO NOT USE ON MAJOR PAVED ROADWAYS WHERE PONDING MAY CAUSE TRAFFIC HAZARDS.

FILTER BAG INLET PROTECTION - TYPE M INLET

N.T.S.

NO.	REVISION	DATE
1	TWP/CTY COMMENTS	05/13/20
2	----	----
3	----	----
4	----	----

COPYRIGHT @ 2020 BY R.J. FISHER & ASSOCIATES, INC.

R. J. FISHER & ASSOCIATES, INC.
SITE PLANNING ▫ CIVIL ENGINEERING ▫ LAND SURVEYS
1546 BRIDGE STREET, NEW CUMBERLAND, PA. 17070
PHONE: (717) 774-7534 FAX: (717) 774-7190
WWW.RJFISHERENGINEERING.COM

EROSION & SEDIMENT POLLUTION CONTROL DETAILS
FOR
LOT 3, BLUE RIDGE VILLAGE
LOCATED IN
LOWER PAXTON TOWNSHIP, DAUPHIN COUNTY, PA

DRAWING ID: 220014-DET

DATE: 04/08/20

J:\PROJECTS\2020\220014\CAD\LDP-SUB\220014-DET.DWG
XREF: ..\..\..\220014\CAD\XREF\220014-xrDTL.dwg
16-DET

Filtrexx

FIGURE 3.18
Typical Compost Sock Washout Installation

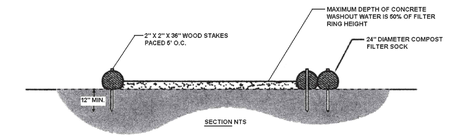

SECTION NTS

NOTES:
1. INSTALL ON FLAT GRADE FOR OPTIMUM PERFORMANCE
2. 18" DIAMETER FILTER SOCK MAY BE STACKED ONTO DOUBLE 24" DIAMETER SOCKS IN PYRAMIDAL CONFIGURATION FOR ADDED HEIGHT.

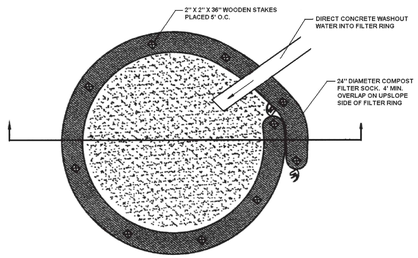

PLAN NTS

A suitable impervious geomembrane shall be placed at the location of the washout prior to installing the socks.
Adapted from Filtrexx

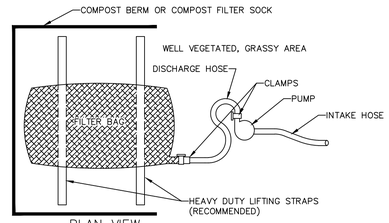

PLAN VIEW

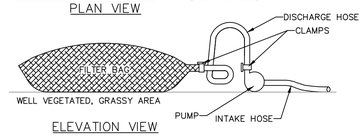

ELEVATION VIEW

NOTES:

LOW VOLUME FILTER BAGS SHALL BE MADE FROM NON-WOVEN GEOTEXTILE MATERIAL SEWN WITH HIGH STRENGTH, DOUBLE STITCHED "J" TYPE SEAMS. THEY SHALL BE CAPABLE OF TRAPPING PARTICLES LARGER THAN 150 MICRONS. HIGH VOLUME FILTER BAGS SHALL BE MADE FROM WOVEN GEOTEXTILES THAT MEET THE FOLLOWING STANDARDS:

PROPERTY	TEST METHOD	MINIMUM STANDARD
AVG. WIDE WIDTH STRENGTH	ASTM D-4884	60 LB/IN
GRAB TENSILE	ASTM D-4632	205 LB
PUNCTURE	ASTM D-4833	110 LB
MULLEN BURST	ASTM D-3786	350 PSI
UV RESISTANCE	ASTM D-4355	70%
AOS % RETAINED	ASTM D-4751	80 SIEVE

A SUITABLE MEANS OF ACCESSING THE BAG WITH MACHINERY REQUIRED FOR DISPOSAL PURPOSES SHALL BE PROVIDED. FILTER BAGS SHALL BE REPLACED WHEN THEY BECOME 1/2 FULL OF SEDIMENT. SPARE BAGS SHALL BE KEPT AVAILABLE FOR REPLACEMENT OF THOSE THAT HAVE FAILED OR ARE FILLED. BAGS SHALL BE PLACED ON STRAPS TO FACILITATE REMOVAL UNLESS BAGS COME WITH LIFTING STRAPS ALREADY ATTACHED.

BAGS SHALL BE LOCATED IN WELL-VEGETATED (GRASSY) AREA, AND DISCHARGE ONTO STABLE, EROSION RESISTANT AREAS. WHERE THIS IS NOT POSSIBLE, A GEOTEXTILE UNDERLAYMENT AND FLOW PATH SHALL BE PROVIDED. BAGS MAY BE PLACED ON FILTER STONE TO INCREASE DISCHARGE CAPACITY. BAGS SHALL NOT BE PLACED ON SLOPES GREATER THAN 5% FOR SLOPES EXCEEDING 5%, CLEAN ROCK OR OTHER NON-ERODIBLE AND NON-POLLUTING MATERIAL MAY BE PLACED UNDER THE BAG TO REDUCE SLOPE STEEPNESS.

COMPOST BERM OR COMPOST FILTER SOCK SHALL BE INSTALLED BELOW BAGS DUE TO THE FACT THAT THIS BMP NEEDS TO BE ABACT DUE TO IMPAIRED WATER SOURCE.

THE PUMP DISCHARGE HOSE SHALL BE INSERTED INTO THE BAGS IN THE MANNER SPECIFIED BY THE MANUFACTURER AND SECURELY CLAMPED. A PIECE OF PVC PIPE IS RECOMMENDED FOR THIS PURPOSE.

THE PUMPING RATE SHALL BE NO GREATER THAN 750 GPM OR 1/2 THE MAXIMUM SPECIFIED BY THE MANUFACTURER, WHICHEVER IS LESS. PUMP INTAKES SHALL BE FLOATING AND SCREENED.

FILTER BAGS SHALL BE INSPECTED DAILY. IF ANY PROBLEM IS DETECTED, PUMPING SHALL CEASE IMMEDIATELY AND NOT RESUME UNTIL THE PROBLEM IS CORRECTED.

PUMPED WATER FILTER BAG

N.T.S.

NO	REVISION	DATE
1	TWP./CTY COMMENTS	05/13/20
2	----	----
3	----	----
4	----	----

COPYRIGHT © 2020 BY
R.J. FISHER & ASSOCIATES, INC.

R. J. FISHER & ASSOCIATES, INC.
SITE PLANNING ▫ CIVIL ENGINEERING ▫ LAND SURVEYS
1546 BRIDGE STREET, NEW CUMBERLAND, PA. 17070
PHONE: (717) 774-7534 FAX: (717) 774-7190
WWW.RJFISHERENGINEERING.COM

EROSION & SEDIMENT POLLUTION CONTROL DETAILS

FOR

LOT 3, BLUE RIDGE VILLAGE

LOCATED IN

LOWER PAXTON TOWNSHIP, DAUPHIN COUNTY, PA

DRAWING ID: 220014-DET

DATE: 04/08/20

SHEET: 17 OF 17

I:\PROJECTS\2020\220014\CAD\PLOT\220014-DET.dwg
REF: I:\2020\220014\CAD\REF\220014-ATD.dwg
17-DET